National
Qualifications
2023

X857/75/02

Physics
Section 1 — Questions

WEDNESDAY, 17 MAY

1:00 PM – 3:30 PM

Instructions for the completion of Section 1 are given on *page 02* of your question and answer booklet X857/75/01.

Record your answers on the answer grid on *page 03* of your question and answer booklet.

Reference may be made to the Data Sheet on *page 02* of this booklet and to the Relationship Sheet X857/75/11.

Before leaving the examination room you must give your question and answer booklet to the Invigilator; if you do not, you may lose all the marks for this paper.

SQA ©

X857750 2

DATA SHEET

Speed of light in materials

Material	Speed in m s^{-1}
Air	3.0×10^8
Carbon dioxide	3.0×10^8
Diamond	1.2×10^8
Glass	2.0×10^8
Glycerol	2.1×10^8
Water	2.3×10^8

Gravitational field strengths

	Gravitational field strength on the surface in N kg^{-1}
Earth	9.8
Jupiter	23
Mars	3.7
Mercury	3.7
Moon	1.6
Neptune	11
Saturn	9.0
Sun	270
Uranus	8.7
Venus	8.9

Specific latent heat of fusion of materials

Material	Specific latent heat of fusion in J kg^{-1}
Alcohol	0.99×10^5
Aluminium	3.95×10^5
Carbon Dioxide	1.80×10^5
Copper	2.05×10^5
Iron	2.67×10^5
Lead	0.25×10^5
Water	3.34×10^5

Specific latent heat of vaporisation of materials

Material	Specific latent heat of vaporisation in J kg^{-1}
Alcohol	11.2×10^5
Carbon Dioxide	3.77×10^5
Glycerol	8.30×10^5
Turpentine	2.90×10^5
Water	22.6×10^5

Speed of sound in materials

Material	Speed in m s^{-1}
Aluminium	5200
Air	340
Bone	4100
Carbon dioxide	270
Glycerol	1900
Muscle	1600
Steel	5200
Tissue	1500
Water	1500

Specific heat capacity of materials

Material	Specific heat capacity in J kg^{-1} °C^{-1}
Alcohol	2350
Aluminium	902
Copper	386
Glass	500
Ice	2100
Iron	480
Lead	128
Oil	2130
Water	4180

Melting and boiling points of materials

Material	Melting point in °C	Boiling point in °C
Alcohol	–98	65
Aluminium	660	2470
Copper	1077	2567
Lead	328	1737
Iron	1537	2737
Water	–	100

Radiation weighting factors

Type of radiation	Radiation weighting factor
alpha	20
beta	1
fast neutrons	10
gamma	1
slow neutrons	3
X-rays	1

SECTION 1 — 25 marks

Attempt ALL questions

1. The letters **X**, **Y**, and **Z** represent missing words from the following passage.

Quantities that have both a magnitude and a direction are called . . . **X** *. . . .*
Two examples of this type of quantity are . . . **Y** *. . . and . . .* **Z** *. . . .*

Which row in the table shows the missing words?

	X	**Y**	**Z**
A	scalars	energy	mass
B	scalars	force	acceleration
C	vectors	energy	mass
D	vectors	force	acceleration
E	vectors	energy	force

[Turn over

2. A trolley is released from the top of a slope and passes between two light gates P and Q.

The distance between the light gates is d.

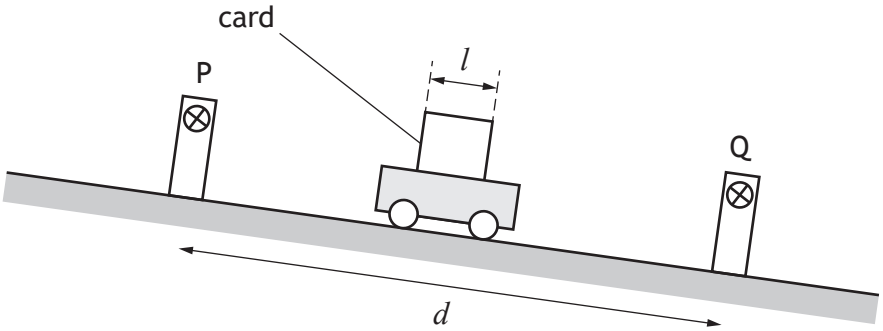

The time taken for the card to pass through light gate P is t_1.

The time taken for the card to pass through light gate Q is t_2.

The length of the card on the trolley is l.

The instantaneous speed of the trolley at light gate Q is given by

A $\dfrac{d}{t_1 + t_2}$

B $\dfrac{l}{t_1 + t_2}$

C $\dfrac{l}{t_1}$

D $\dfrac{l}{t_2}$

E $\dfrac{d}{t_2}$

3. The graph shows how the speed of a runner changes during the last 8.0 seconds of a race.

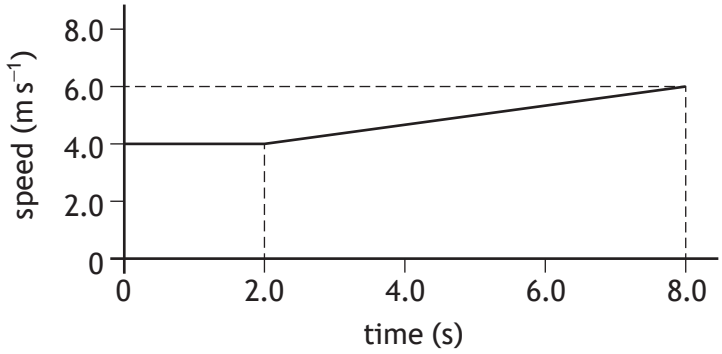

The distance travelled during the 8.0 seconds is

A 24 m

B 32 m

C 38 m

D 44 m

E 48 m.

4. A block is pushed 3.0 m up a slope by a constant force of 6.0 N.

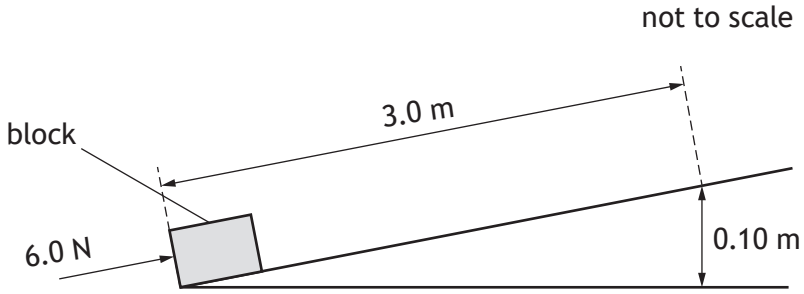

The force of friction between the block and the slope is 2.0 N.

The mass of the block is 1.5 kg.

The work done by the pushing force in moving the block 3.0 m up the slope is

A 1.5 J

B 6.0 J

C 12 J

D 18 J

E 24 J.

[Turn over

5. A trolley of mass 4.0 kg is travelling along a track.

The trolley accelerates from 2.0 m s^{-1} to 6.0 m s^{-1}.

The increase in kinetic energy of the trolley is

A 32 J

B 64 J

C 72 J

D 80 J

E 128 J.

6. The natural greenhouse effect is vital for sustaining life on Earth.

The 'no greenhouse' temperature is the average surface temperature of Earth if there were no natural greenhouse effect.

The 'no greenhouse' temperature T can be determined using the relationship

$$T^2 = 280^2 \times \sqrt{\frac{(1-\alpha)}{d^2}}$$

where: T is the 'no greenhouse' temperature in kelvin

α is the proportion of incoming solar radiation that Earth reflects

d is the mean distance from the Sun in astronomical units (AU).

The value of α for Earth is taken to be 0.290 and the mean distance from the Sun to Earth is 1.00 AU.

The 'no greenhouse' temperature of Earth is

A 14.1 K

B 15.4 K

C 236 K

D 257 K

E 66 100 K.

7. Doris is a small, rocky, irregular shaped object that orbits the Sun between Mars and Jupiter.

Doris is an example of

A an asteroid

B a dwarf planet

C an exoplanet

D a planet

E a star.

8. A space vehicle of mass 350 kg is free falling vertically towards the surface of Mars.

Rocket engines are now fired, which apply a combined upwards force of 2200 N on the vehicle.

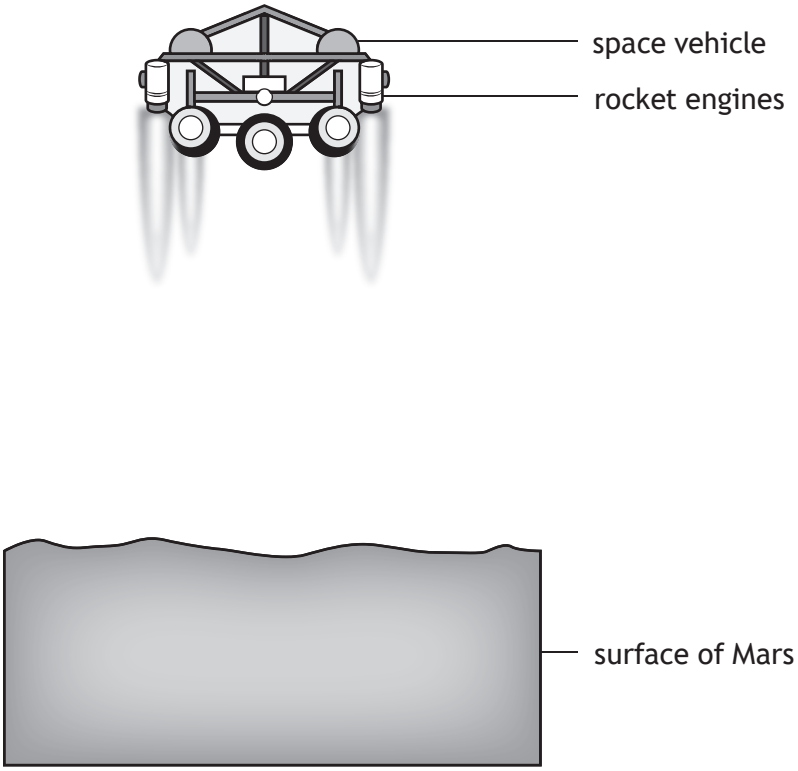

Just after the rocket engines are fired, the vehicle will

A move away from the surface of Mars at a constant speed

B move away from the surface of Mars with an increasing speed

C move towards the surface of Mars at a constant speed

D move towards the surface of Mars with a decreasing speed

E move towards the surface of Mars with an increasing speed.

[Turn over

9. A uniform electric field exists between plates Q and R.

The diagram shows the path taken by particle P as it passes through the field.

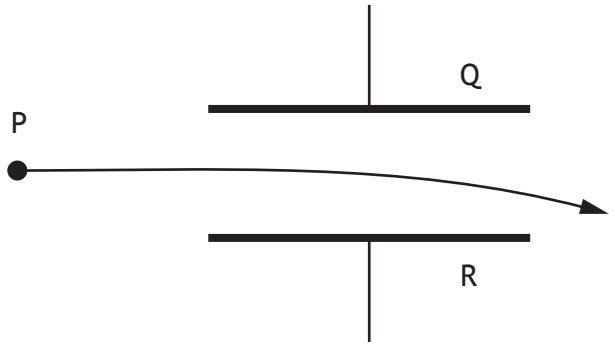

Which row in the table identifies the charge on particle P, the charge on plate Q, and the charge on plate R?

	Charge on particle P	Charge on plate Q	Charge on plate R
A	negative	positive	negative
B	no charge	negative	positive
C	no charge	positive	negative
D	positive	negative	positive
E	positive	positive	negative

10. Alternating current (a.c.) can be defined as a current where

A only negative charges move

B charges move in one direction only

C charges reverse direction at regular intervals

D only positive charges move

E the rate of flow of charge is constant.

11. A circuit is set up as shown.

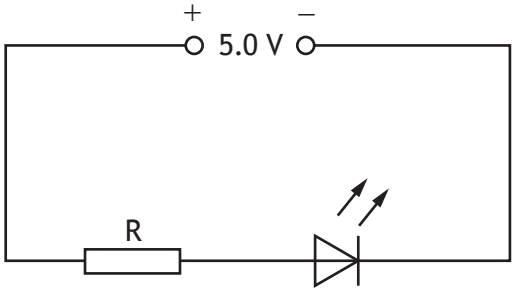

The voltage across the LED is 2.2 V.

The current in the LED is 10.0 mA.

The resistance of resistor R is

A 0.22 Ω

B 0.28 Ω

C 220 Ω

D 280 Ω

E 500 Ω.

12. A circuit is set up as shown.

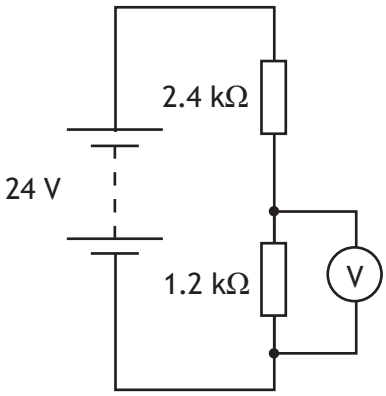

The reading on the voltmeter is

A 8 V

B 10 V

C 16 V

D 20 V

E 24 V.

[Turn over

13. A circuit containing an LDR switches on a motor when the light level drops below a certain value.

The resistance of the LDR increases as the light level decreases.

Which of the following shows this circuit?

A

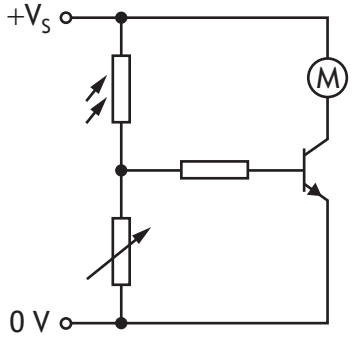

D

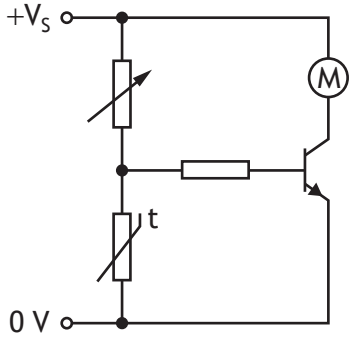

B

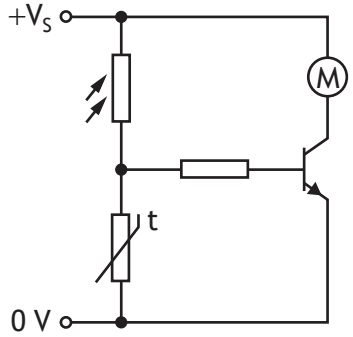

E

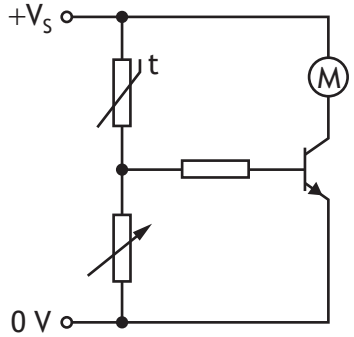

C

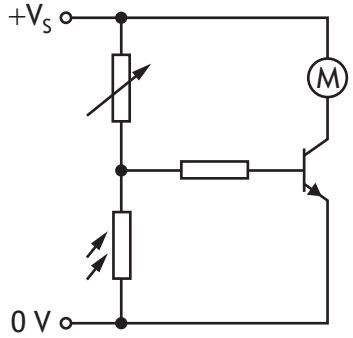

14. A slow cooker has a power rating of 250 W.

The slow cooker is switched on for 2 hours.

The energy used by the slow cooker in this time is

A	25 J
B	500 J
C	30 000 J
D	900 000 J
E	1 800 000 J.

15. A student investigates the relationship between the power developed in a resistor and the resistance of the resistor. The voltage across the resistor and the temperature of the resistor are kept constant during the investigation.

The graph shows the results.

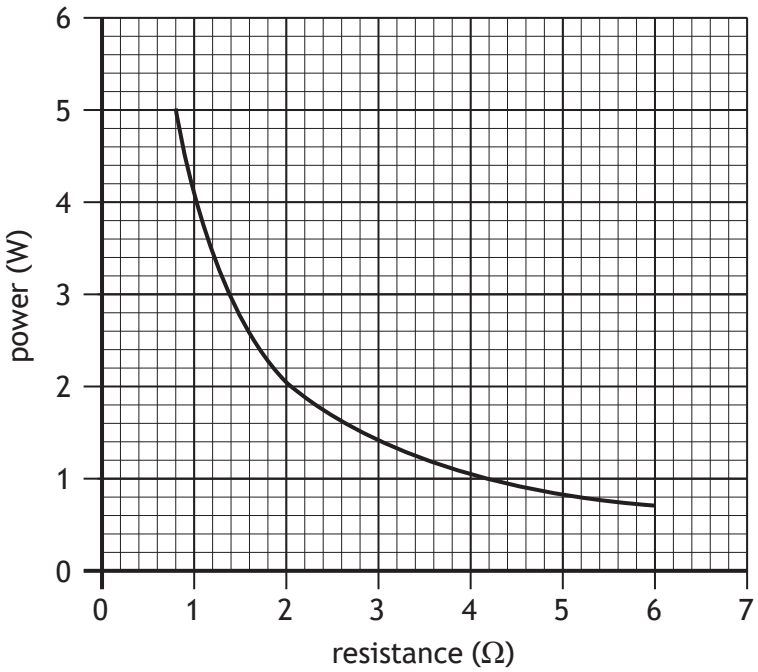

The voltage across the resistor is

A 0.50 V

B 1.0 V

C 2.0 V

D 4.0 V

E 16 V.

[Turn over

16. A student carries out an experiment to determine the specific heat capacity of copper using the apparatus shown.

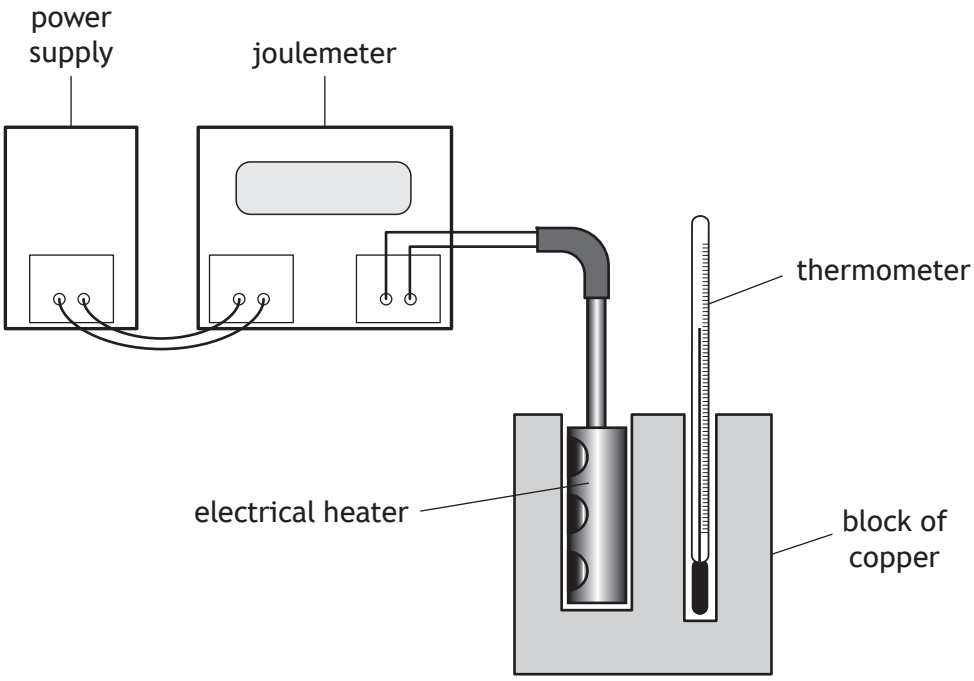

The student switches on the power supply and the electrical heater heats the block of copper.

The joulemeter measures the energy supplied to the electrical heater.

The student suggests the following measurements should also be made:

I The mass of the block of copper.

II The initial and final readings on the thermometer.

III The power rating of the electrical heater.

Which of these measurements **must** be made to determine the specific heat capacity of copper?

A I only

B II only

C I and II only

D II and III only

E I, II and III

17. The minimum energy required to melt 3.5 kg of ice at its melting point into water at the same temperature is

A 1.5×10^4 J

B 1.2×10^6 J

C 7.9×10^6 J

D 1.2×10^9 J

E 7.9×10^9 J.

18. A hammer hits a nail with a force of 5.0 kN.

The pressure exerted by the hammer on the nail is 2.0×10^8 Pa.

The area of the nail hit by the hammer is

A 2.5×10^{-8} m^2

B 2.5×10^{-5} m^2

C 4.0×10^4 m^2

D 4.0×10^7 m^2

E 1.0×10^{12} m^2.

19. A sealed hollow buoy drifts from warm Atlantic waters into colder Arctic waters.

The volume of the buoy remains constant.

The pressure of the trapped air inside the buoy changes because pressure is

A directly proportional to the temperature in kelvin

B inversely proportional to the temperature in kelvin

C inversely proportional to the volume of the air inside the buoy

D inversely proportional to the temperature in degrees Celsius

E directly proportional to the temperature in degrees Celsius.

[Turn over

20. The pressure of a fixed mass of gas is 5.0×10^5 Pa. The temperature of the gas is 320 K and the volume of the gas is 2.2 m^3.

The gas is then heated to a temperature of 370 K and the pressure of the gas increases to 5.5×10^5 Pa.

The new volume of the gas is

A 1.7 m^3

B 2.1 m^3

C 2.3 m^3

D 2.8 m^3

E 4.1 m^3.

21. The diagram represents a wave.

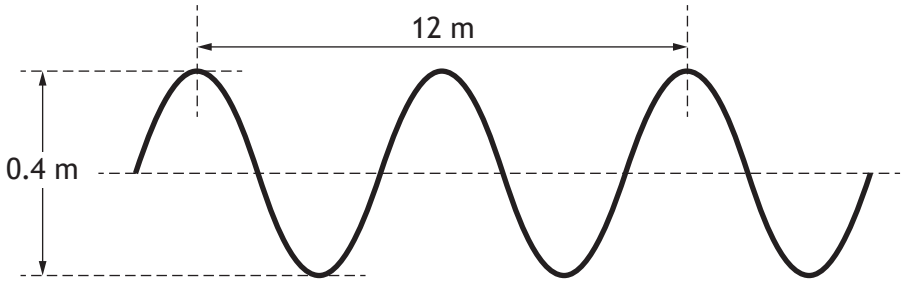

The speed of the wave is 3.0 m s^{-1}.

Which row in the table shows the amplitude and frequency of this wave?

	Amplitude (m)	Frequency (Hz)
A	0.2	0.25
B	0.2	0.50
C	0.2	2.0
D	0.4	0.50
E	0.4	2.0

22. Which diagram shows the diffraction of water waves as they pass through a gap in a barrier?

A

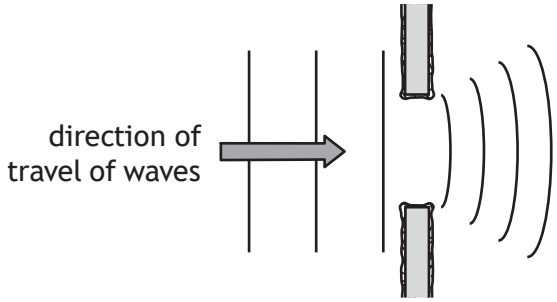

B

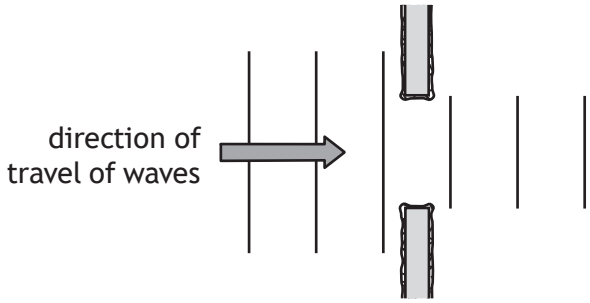

C

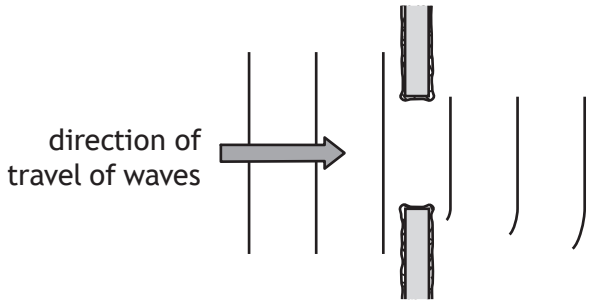

D

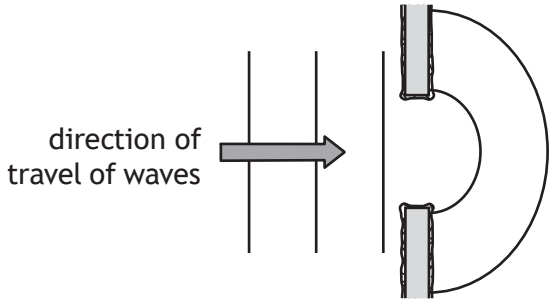

E

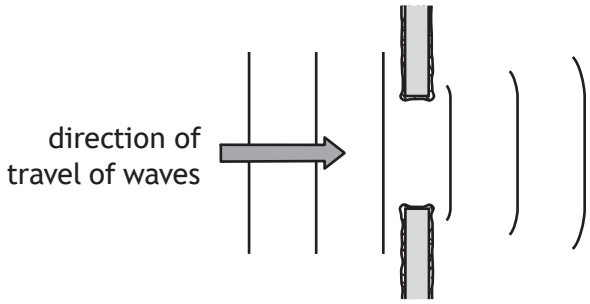

23. A ray of red light passes through a glass block as shown.

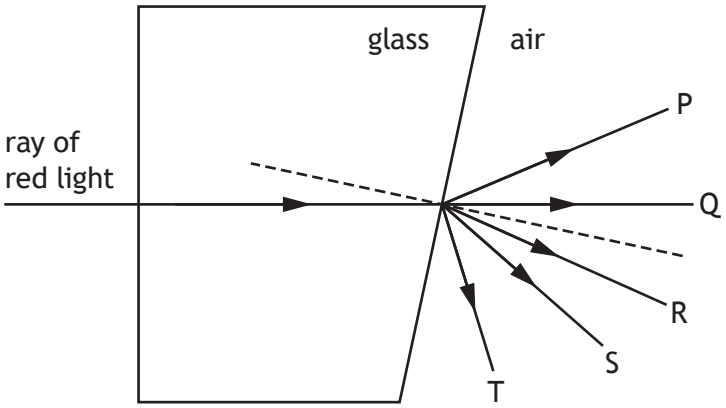

Which ray shows the path of the red light in air?

A P

B Q

C R

D S

E T

24. A sample of uranium has an activity of 2.4×10^4 Bq.
The number of nuclei decaying in 15 minutes is

A 2.7×10^1

B 1.6×10^3

C 2.4×10^4

D 3.6×10^5

E 2.2×10^7.

25. A student makes the following statements about nuclear fusion:

I Nuclear fusion is when a large nucleus splits into smaller nuclei.

II Plasma containment is required to sustain nuclear fusion reactions in a reactor.

III Nuclear fusion takes place at low temperatures.

Which of these statements is/are correct?

A I only

B II only

C I and II only

D I and III only

E II and III only

[END OF SECTION 1. NOW ATTEMPT THE QUESTIONS IN SECTION 2 OF YOUR QUESTION AND ANSWER BOOKLET]

SPACE FOR ROUGH WORK

SPACE FOR ROUGH WORK

[BLANK PAGE]

DO NOT WRITE ON THIS PAGE

FOR OFFICIAL USE

N5

National Qualifications 2023

Mark

X857/75/01

Physics
Section 1 — Answer grid and Section 2

WEDNESDAY, 17 MAY

1:00 PM – 3:30 PM

X857750 1

Fill in these boxes and read what is printed below.

Full name of centre

Town

Forename(s)

Surname

Number of seat

Date of birth

Day

Month

Year

Scottish candidate number

Total marks — 135

SECTION 1 — 25 marks
Attempt ALL questions.
Instructions for completion of Section 1 are given on *page 02*.

SECTION 2 — 110 marks
Attempt ALL questions.

Reference may be made to the Data sheet on *page 02* of the question paper X857/75/02 and to the Relationships sheet X857/75/11.

Write your answers clearly in the spaces provided in this booklet. Additional space for answers and rough work is provided at the end of this booklet. If you use this space you must clearly identify the question number you are attempting. Any rough work must be written in this booklet. Score through your rough work when you have written your final copy.

Use **blue** or **black** ink.

Before leaving the examination room you must give this booklet to the Invigilator; if you do not, you may lose all the marks for this paper.

SQA ©

X857750 1 01

SECTION 1 — 25 marks

The questions for Section 1 are contained in the question paper X857/75/02.

Read these and record your answers on the answer grid on *page 03* opposite.

Use **blue** or **black** ink. Do NOT use gel pens or pencil.

1. The answer to each question is **either** A, B, C, D or E. Decide what your answer is, then fill in the appropriate bubble (see sample question below).

2. There is **only one correct** answer to each question.

3. Any rough work must be written in the additional space for answers and rough work at the end of this booklet.

Sample question

The energy unit measured by the electricity meter in your home is the

A ampere

B kilowatt-hour

C watt

D coulomb

E volt.

The correct answer is **B** — kilowatt-hour. The answer **B** bubble has been clearly filled in (see below).

A	B	C	D	E
○	●	○	○	○

Changing an answer

If you decide to change your answer, cancel your first answer by putting a cross through it (see below) and fill in the answer you want. The answer below has been changed to **D**.

A	B	C	D	E
○	~~●~~	○	●	○

If you then decide to change back to an answer you have already scored out, put a tick (✓) to the **right** of the answer you want, as shown below:

A	B	C	D	E
○	~~●~~✓	○	~~●~~	○

or

A	B	C	D	E
○	~~●~~✓	○	○	○

X857750102

SECTION 1 — Answer grid

0BJ25AE1

	A	B	C	D	E
1	○	○	○	○	○
2	○	○	○	○	○
3	○	○	○	○	○
4	○	○	○	○	○
5	○	○	○	○	○
6	○	○	○	○	○
7	○	○	○	○	○
8	○	○	○	○	○
9	○	○	○	○	○
10	○	○	○	○	○
11	○	○	○	○	○
12	○	○	○	○	○
13	○	○	○	○	○
14	○	○	○	○	○
15	○	○	○	○	○
16	○	○	○	○	○
17	○	○	○	○	○
18	○	○	○	○	○
19	○	○	○	○	○
20	○	○	○	○	○
21	○	○	○	○	○
22	○	○	○	○	○
23	○	○	○	○	○
24	○	○	○	○	○
25	○	○	○	○	○

X857750103

[BLANK PAGE]

DO NOT WRITE ON THIS PAGE

X857750104

[Turn over for SECTION 2

DO NOT WRITE ON THIS PAGE

X857750105

MARKS | DO NOT WRITE IN THIS MARGIN

SECTION 2 — 110 marks

Attempt ALL questions

1. A seagull flies above a school playground. The seagull remains at a constant height above the ground during its flight.

(a) The seagull flies from point A to point E following the route shown.

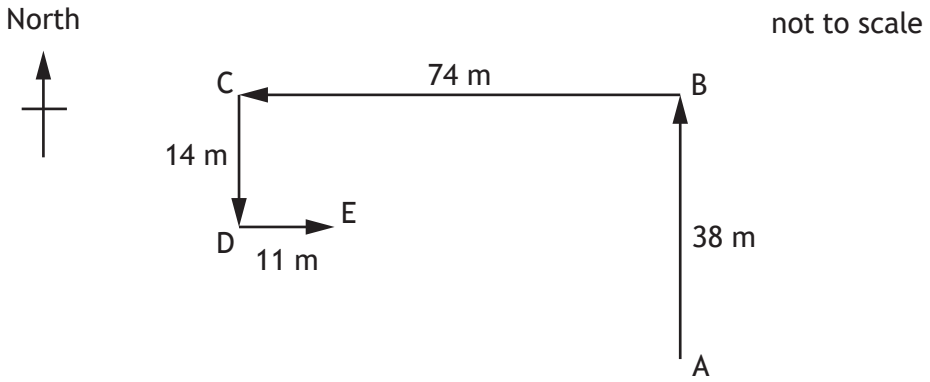

(i) By scale diagram or otherwise, determine the magnitude of the resultant displacement of the seagull from point A to point E. **2**

Space for working and answer

MARKS | DO NOT WRITE IN THIS MARGIN

1. (a) (continued)

(ii) By scale diagram or otherwise, determine the direction of the resultant displacement of the seagull from point A to point E. **2**

Space for working and answer

(b) The seagull takes 31 s to travel from point A to point E.

(i) Determine the average velocity of the seagull for this journey. **3**

Space for working and answer

(ii) A student states that the average speed of the seagull between point A and point E is greater than the magnitude of the average velocity of the seagull between point A and point E.

Explain why the student is correct. **2**

Looking for more resources? Visit https://sqa.my/ – Scotland's #1 Past Paper Archive

1. (continued)

(c) The seagull now flies at a height of 7.5 m above the ground, holding a chip in its beak.

The mass of the chip is 0.0025 kg.

(i) Show that the gravitational potential energy of the chip at this height is 0.18 J. **2**

Space for working and answer

(ii) The seagull now drops the chip.

Determine the maximum vertical speed of the chip as it reaches the ground. **3**

Space for working and answer

MARKS | DO NOT WRITE IN THIS MARGIN

1. (c) (continued)

(iii) Explain why, in practice, the vertical speed of the chip as it reaches the ground is less than determined in (c) (ii). **1**

[Turn over

2. During a cycle race, a cyclist attempts to pass a water bottle to a team-mate.

The cyclist is travelling in a straight line at 12.5 m s^{-1} when they drop the bottle. The bottle hits the ground 0.53 s later.

The effects of air resistance on the bottle are negligible.

(a) A spectator at the side of the road observes the cyclist dropping the bottle.

On the diagram below, sketch the path taken by the bottle from the point it is dropped, as observed by the spectator at the side of the road. **1**

(An additional diagram, if required, can be found on *page 46*.)

(b) (i) Calculate the vertical velocity of the bottle as it reaches the ground. **3**

Space for working and answer

2. (b) (continued)

(ii) Sketch a velocity-time graph showing the magnitude of the vertical velocity of the bottle from the time it is released until it reaches the ground.

Numerical values are required on both axes. **2**

(An additional graph, if required, can be found on *page 46*.)

(iii) Determine the height from which the bottle was dropped. **3**

Space for working and answer

[Turn over

MARKS | DO NOT WRITE IN THIS MARGIN

2. (continued)

(c) At another point in the race, the cyclist rides behind their team-mate along a straight, flat section of road.

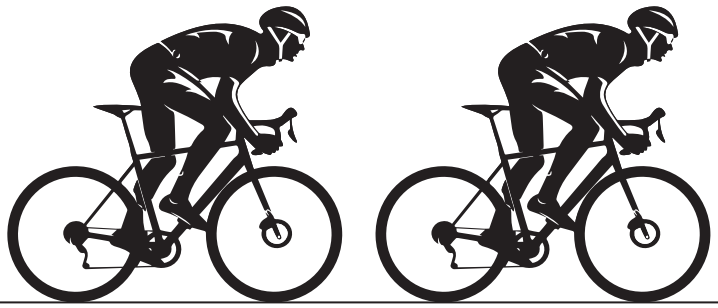

(i) The cyclist and bike have a combined mass of 74 kg.

The cyclist produces a forward force of 54 N.

The total frictional force acting on the cyclist and bike is 22 N.

Determine the acceleration of the cyclist and bike. **4**

Space for working and answer

(ii) Explain, in terms of the forces acting on the cyclist, the advantage of cycling behind a team-mate. **1**

[Turn over for next question

DO NOT WRITE ON THIS PAGE

X857750113

3. Information about some satellites is shown in the table.

Name of satellite	Date launched	Orbital altitude h (km)	Orbital period T
UKube-1	8 July 2014	825	101 minutes
Kosmos 2460	1 March 2010	19 100	676 minutes
Magellan	22 August 2019	20 200	718 minutes
Astra 1KR	20 April 2006	36 000	24 hours
Vela 4B	28 April 1967	111 000	111 hours

(a) Television signals are transmitted from satellites that remain above the same point on Earth's surface at all times.

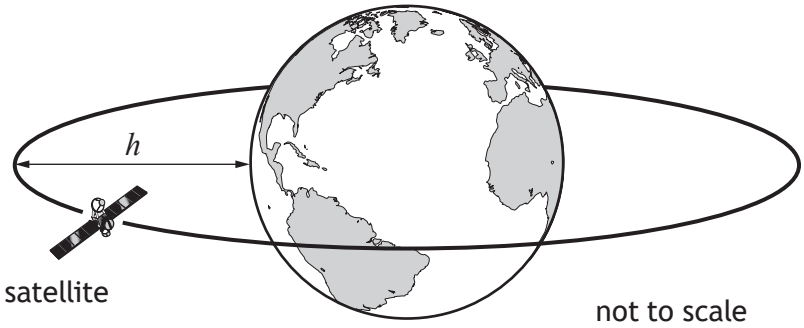

State which of the satellites in the table is used to transmit these television signals.

You must justify your answer. **2**

MARKS | DO NOT WRITE IN THIS MARGIN

3. (continued)

(b) UKube-1 has a mass of 3.5 kg.

At an orbital altitude of 825 km the gravitational field strength of Earth is $7.7\ \mathrm{N\,kg^{-1}}$.

Calculate the weight of UKube-1 at this orbital altitude. **3**

Space for working and answer

(c) Another satellite is in orbit at an altitude of 1200 km.

Predict the orbital period of this satellite. **1**

[Turn over

MARKS | DO NOT WRITE IN THIS MARGIN

4. A space scientist makes the following statement.

'Before we can have human space exploration of the solar system and beyond, we need to build a base on the Moon.'

Using your knowledge of physics, comment on the benefits and/or challenges of using a base on the Moon from which humans could explore the solar system and beyond. **3**

X857750116

DO NOT WRITE IN THIS MARGIN

4. (continued)

X857750117

MARKS | DO NOT WRITE IN THIS MARGIN

5. An astronomer is using a space-based telescope to observe a star.

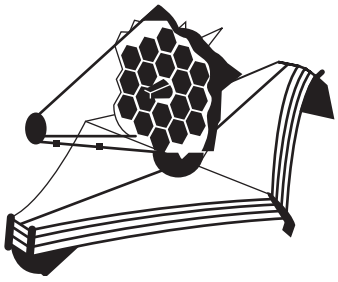

(a) Suggest an advantage of using a space-based telescope compared to using a ground-based telescope to observe the star. **1**

(b) The line spectrum from the star is shown, along with the line spectra of the elements hydrogen, helium, mercury, calcium, and sodium.

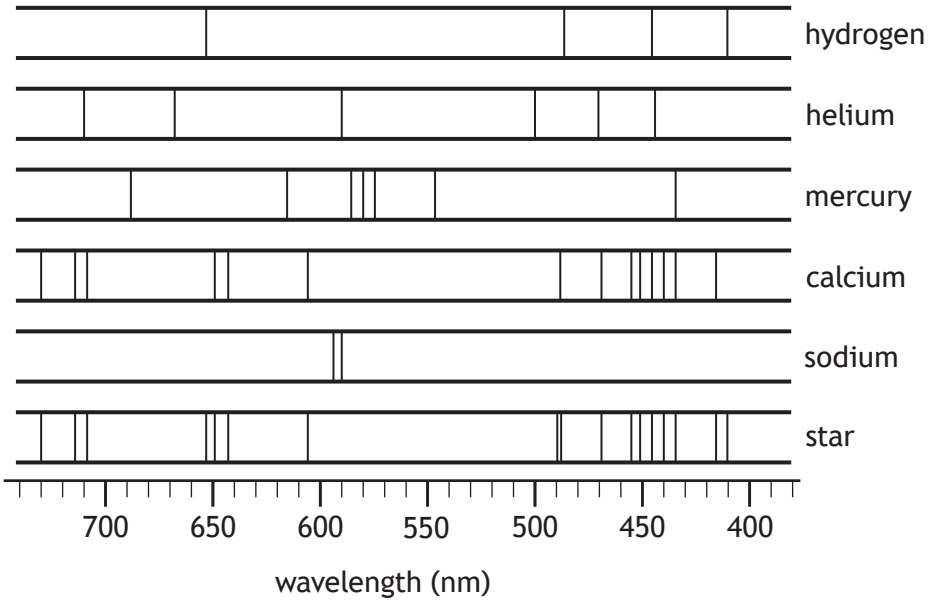

Determine which of these elements are present in the star. **1**

X857750118

MARKS | DO NOT WRITE IN THIS MARGIN

5. (continued)

(c) The star is 343 light-years from Earth.

Show that the distance from the star to Earth is 3.2×10^{18} m. **2**

Space for working and answer

[Turn over

MARKS | DO NOT WRITE IN THIS MARGIN

6. A student sets up the following circuit.

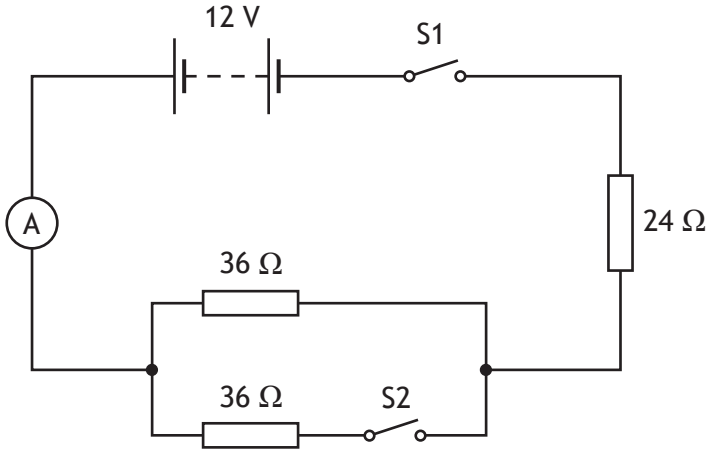

Initially, both switch S1 and switch S2 are open

(a) The student closes switch S1.

Determine the reading on the ammeter. **4**

Space for working and answer

(b) The student now also closes switch S2.

(i) Determine the total resistance of this circuit. **4**

Space for working and answer

MARKS | DO NOT WRITE IN THIS MARGIN

6. (b) (continued)

(ii) State whether the reading on the ammeter will now be less than, equal to or greater than the value determined in (a).

You must justify your answer. **2**

[Turn over

Looking for more resources? Visit https://sqa.my/ – Scotland's #1 Past Paper Archive

DO NOT WRITE IN THIS MARGIN

7. A capacitor consisting of two parallel metal plates, X and Y, is connected in a circuit as shown.

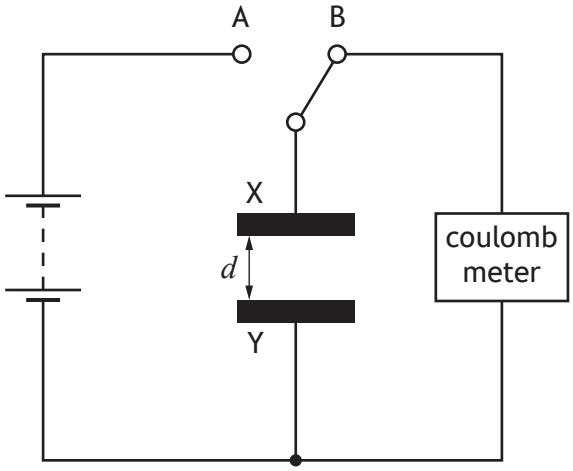

The distance d between plate X and plate Y can be adjusted.

The capacitor is initially uncharged.

The switch is moved to position A and charge is transferred to the capacitor.

The switch is now moved to position B and the charge Q stored on the capacitor is measured by the coulombmeter.

This process is repeated for a range of different distances d between plate X and plate Y.

(a) The charge Q stored on the capacitor for a range of different distances d between plate X and plate Y is shown in the table.

d (mm)	Q ($\times 10^{-12}$ C)
10	178
20	90
30	62
40	47
50	37

Looking for more resources? Visit https://sqa.my/ – Scotland's #1 Past Paper Archive

MARKS | DO NOT WRITE IN THIS MARGIN

7. (a) (continued)

(i) Using the graph paper, draw a graph of these results. **3**

(Additional graph paper, if required, can be found on *page 47*.)

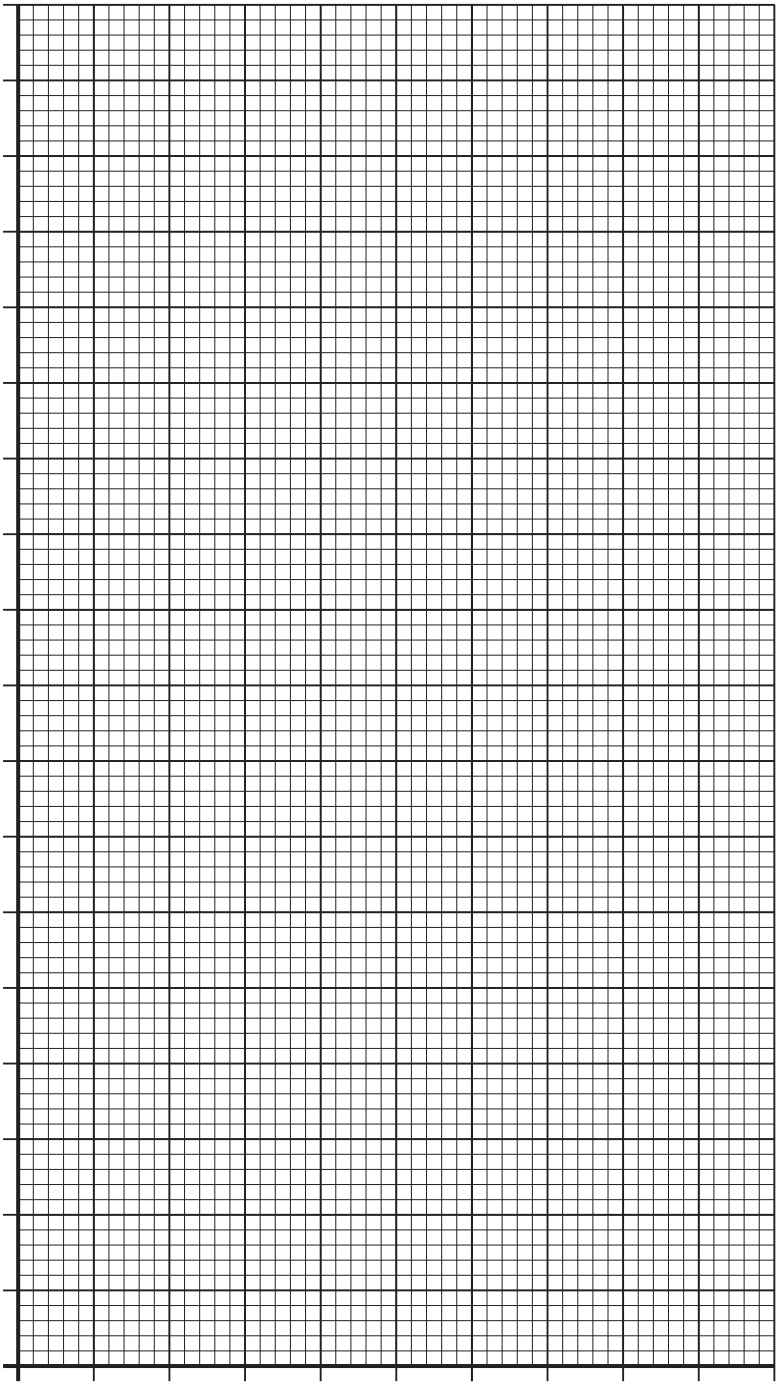

X857750123

MARKS | DO NOT WRITE IN THIS MARGIN

7. (a) (continued)

(ii) Use your graph to determine the charge stored on the capacitor when the distance between plate X and plate Y is 25 mm. **1**

(b) Suggest **two** ways in which the experimental procedure could be improved. **2**

[Turn over for next question

DO NOT WRITE ON THIS PAGE

X857750125

MARKS | DO NOT WRITE IN THIS MARGIN

8. A set of hair straighteners contain a pair of titanium plates that are heated.

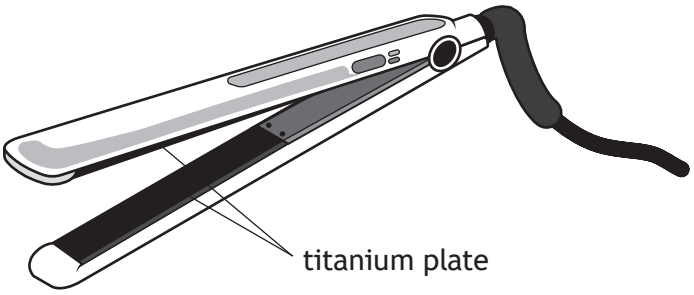

(a) One of the titanium plates has a mass of 1.90×10^{-2} kg.

The titanium plate is at an initial temperature of 25 °C. The hair straighteners are switched on and the titanium plate reaches a temperature of 235 °C.

The titanium plate has a specific heat capacity of 532 J kg^{-1} $°C^{-1}$.

(i) Calculate the minimum energy required to raise the temperature of the titanium plate from 25 °C to 235 °C. **3**

Space for working and answer

(ii) Explain why the energy supplied to the titanium plate is greater than the heat energy gained by the plate. **1**

MARKS | DO NOT WRITE IN THIS MARGIN

8. (continued)

(b) The titanium plates are now replaced with ceramic plates.

Suggest **two** reasons why the time taken to heat the ceramic plates from 25 °C to 235 °C is different to the time taken to heat the titanium plates from 25 °C to 235 °C. **2**

[Turn over

MARKS | DO NOT WRITE IN THIS MARGIN

9. An aircraft is flying at high altitude.

(a) During the flight the pressure of the air inside the aircraft is reduced.

(i) State what is meant by the term *pressure*. **1**

(ii) During the flight a passenger notices that the volume of a crisp packet is greater than it was at take-off.

At take-off the pressure of the gas inside the crisp packet was 101 kPa and the volume of gas in the crisp packet was 2.3×10^{-3} m^3.

During the flight the pressure of the gas inside the crisp packet is 92 kPa.

The temperature of the gas inside the crisp packet remains constant.

Calculate the volume of the gas inside the crisp packet at a pressure of 92 kPa. **3**

Space for working and answer

(iii) Describe how the kinetic model accounts for the pressure of the gas inside the crisp packet. **1**

* X 8 5 7 7 5 0 1 2 8 *

MARKS | DO NOT WRITE IN THIS MARGIN

9. (continued)

(b) Flying at high altitude increases the exposure of passengers and crew to radiation.

The graph shows how altitude affects the equivalent dose rate received by the passengers and crew on the aircraft.

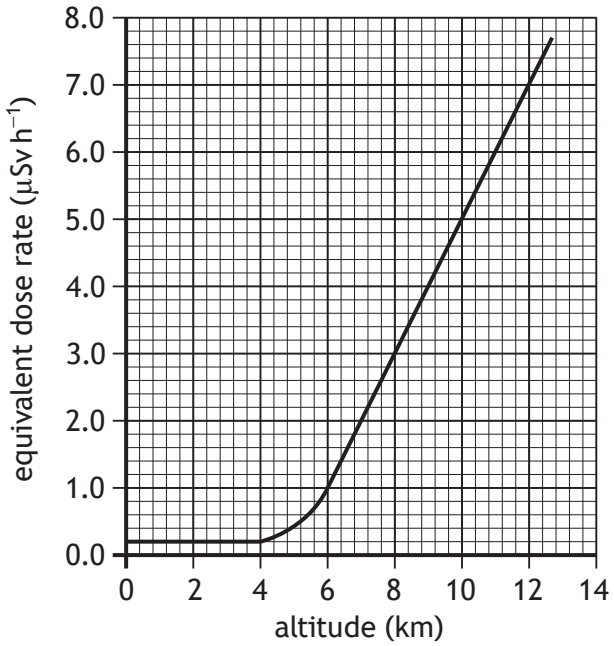

The aircraft flies at an altitude of 11 km for 3.5 hours.

Calculate the equivalent dose received by a crew member during this time. **3**

Space for working and answer

* X 8 5 7 7 5 0 1 2 9 *

10. Some cars have parking sensors that emit pulses of ultrasound.

Ultrasound is high frequency sound waves. The emitted sound waves reflect from objects and are detected by sensors on the car.

During testing, a stationary car emits a sound wave with a frequency of 48 000 Hz.

The wave reflects from a wall and is detected by the sensors on the car.

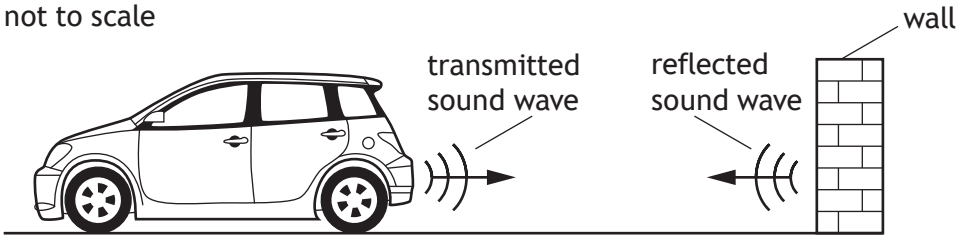

(a) The time taken between the sound wave being emitted and detected by the car is 0.015 s.

Determine the distance between the car and the wall. **4**

Space for working and answer

MARKS | DO NOT WRITE IN THIS MARGIN

10. (continued)

(b) The system in the car is now adjusted to emit sound waves with a different frequency.

An oscilloscope connected to the system displays the following trace for the sound waves emitted by the car.

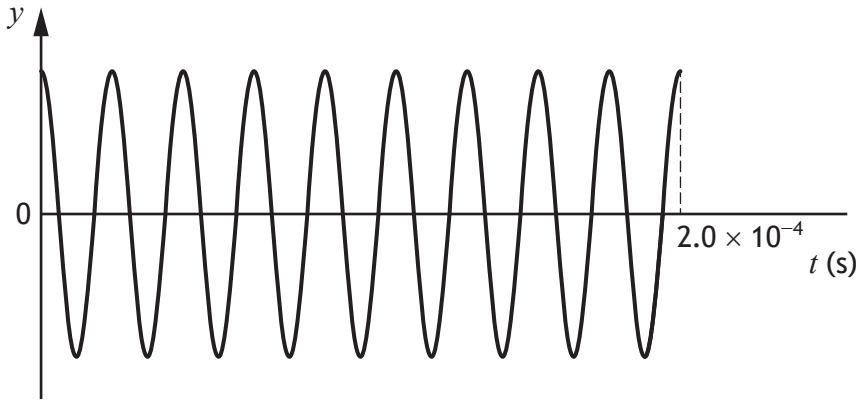

(i) Show that the frequency of this sound wave is 45 000 Hz. **2**

Space for working and answer

(ii) Explain why the time taken between this sound wave being emitted and detected is also 0.015 s. **1**

[Turn over

MARKS | DO NOT WRITE IN THIS MARGIN

11. The diagram shows the electromagnetic spectrum in order of increasing wavelength.

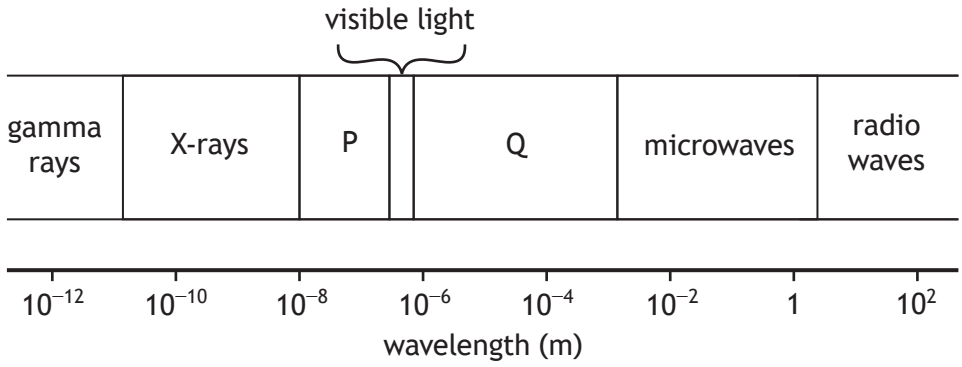

The names of two parts of the spectrum P and Q have been omitted.

(a) State the names of parts P and Q. **1**

P:

Q:

(b) State which part of the electromagnetic spectrum experiences the greatest amount of diffraction.

Justify your answer. **2**

MARKS | DO NOT WRITE IN THIS MARGIN

11. (continued)

(c) Electromagnetic radiation has many applications in everyday life.

(i) Wireless headphones receive electromagnetic waves with a frequency of 2.42 GHz from an audio device.

(A) Show that the wavelength of these waves is 0.12 m. **2**

Space for working and answer

(B) Identify the part of the electromagnetic spectrum that these waves belong to. **1**

[Turn over

* X 8 5 7 7 5 0 1 3 3 *

11. (c) (continued)

(ii) X-rays are used in dental procedures to examine the condition of a patient's teeth.

During this procedure the patient's head is exposed to X-rays.

The mass of the patient's head is 4.5 kg.

The patient's head receives an absorbed dose of 5.0 μGy from the X-rays.

(A) Calculate the energy of the radiation absorbed by the patient's head. **3**

Space for working and answer

(B) Calculate the equivalent dose received by the patient's head. **3**

Space for working and answer

[Turn over for next question

DO NOT WRITE ON THIS PAGE

X857750135

12. The use of analogies from everyday life can help improve the understanding of physics concepts.

Rows of students with arms linked together moving from a smooth pavement to sand can be used as an analogy for the refraction of light.

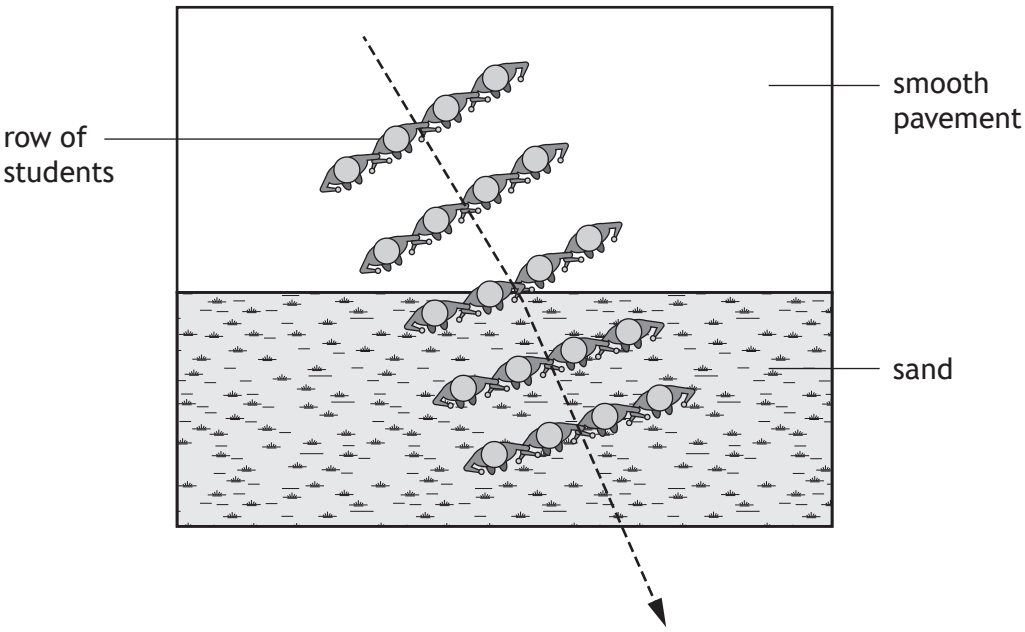

Using your knowledge of physics, comment on this analogy. **3**

DO NOT WRITE IN THIS MARGIN

12. (continued)

X857750137

[BLANK PAGE]

DO NOT WRITE ON THIS PAGE

X857750138

MARKS | DO NOT WRITE IN THIS MARGIN

13. An experiment is carried out, using the apparatus shown, to investigate the radiation emitted from different radioactive sources.

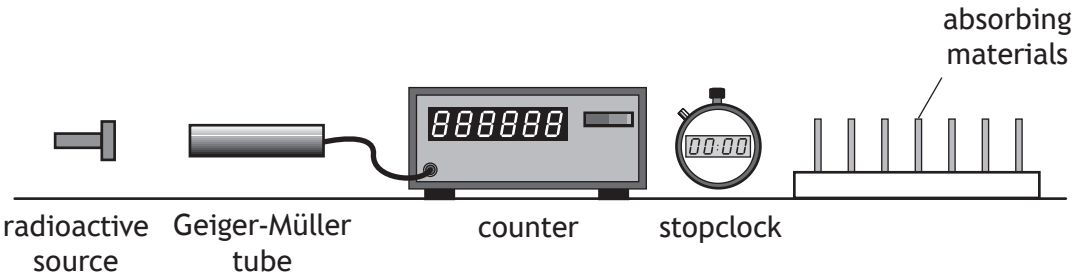

Different absorbing materials are placed, in turn, between the radioactive source and the Geiger-Müller tube, and the count rate is determined.

This procedure is repeated for each radioactive source.

The results are shown in the table.

Radioactive source	Count rate (counts per minute)			
	No absorbing material	Sheet of paper	3 mm thickness of aluminium	8 mm thickness of lead
X	540	542	539	380
Y	823	350	354	171
Z	652	649	12	14

(a) One of the sources emits beta radiation only, one emits gamma radiation only, and one emits both alpha and gamma radiation.

State which source, X, Y or Z, emits both alpha and gamma radiation.

Justify your answer. **3**

13. (continued)

(b) A second experiment is carried out to investigate the ionising effect of radiation.

A radioactive source is held close to a spark counter. The spark counter consists of a metal wire connected to a microammeter and a high voltage power supply as shown.

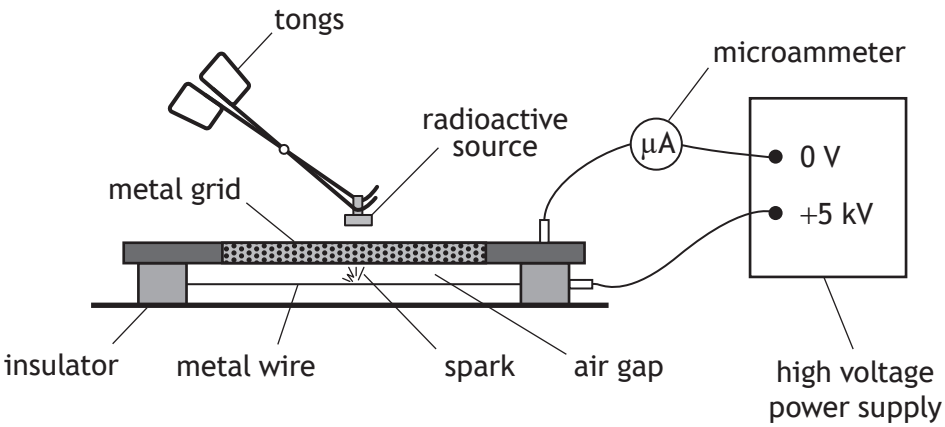

A radioactive source is placed close to the metal grid.

Radiation from the source ionises the air between the metal wire and the grid. Sparks are produced between the wire and the grid.

(i) State what is meant by the term *ionisation*. **1**

MARKS | DO NOT WRITE IN THIS MARGIN

13. (b) (continued)

(ii) The radioactive source used in this experiment emits alpha and gamma radiation.

The source is placed at different distances above the metal grid and the sparks produced are observed.

The results are shown in the table below.

Distance between the source and metal grid (mm)	Observation
10	continuous sparking
30	few sparks
60	no sparks

Using information from the table, state which type of radiation emitted from the source is causing the air between the wire and metal grid to be ionised.

You must justify your answer. **2**

(iii) The radioactive source is now placed at a fixed height above the metal grid.

In a time of one minute, 96 sparks are observed and the average reading on the ammeter is 0.12 μA.

Determine the average charge transferred between the wire and the grid during each spark. **4**

Space for working and answer

* X 8 5 7 7 5 0 1 4 1 *

14. Iodine-125 is a radioactive substance used to treat cancer.

A sealed capsule containing iodine-125 is implanted inside a patient, next to the cancer cells.

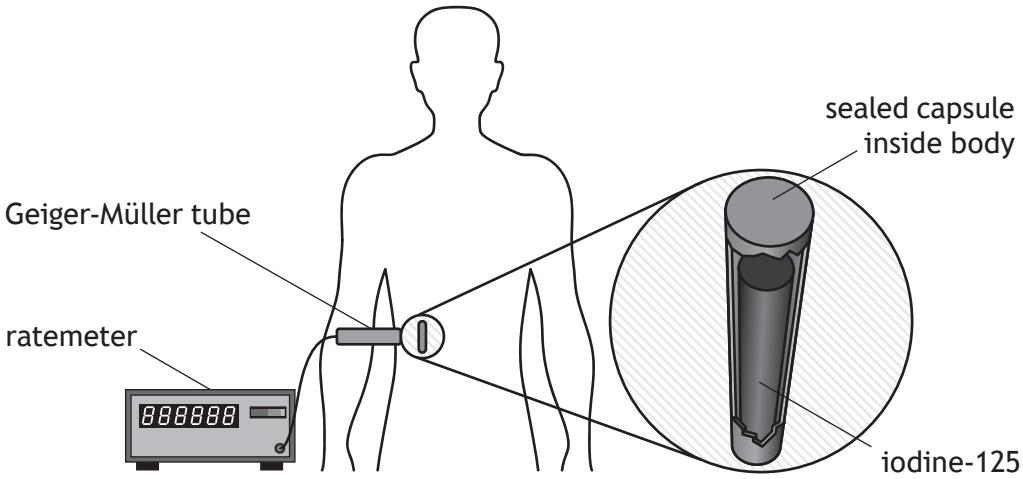

Gamma rays emitted by the iodine-125 damage the cancer cells.

A Geiger-Müller tube and ratemeter are used to measure the count rate from the iodine-125.

Measurements of the count rate are taken at regular time intervals.

These measurements are used to produce a graph showing how the corrected count rate varies with the number of days after implant.

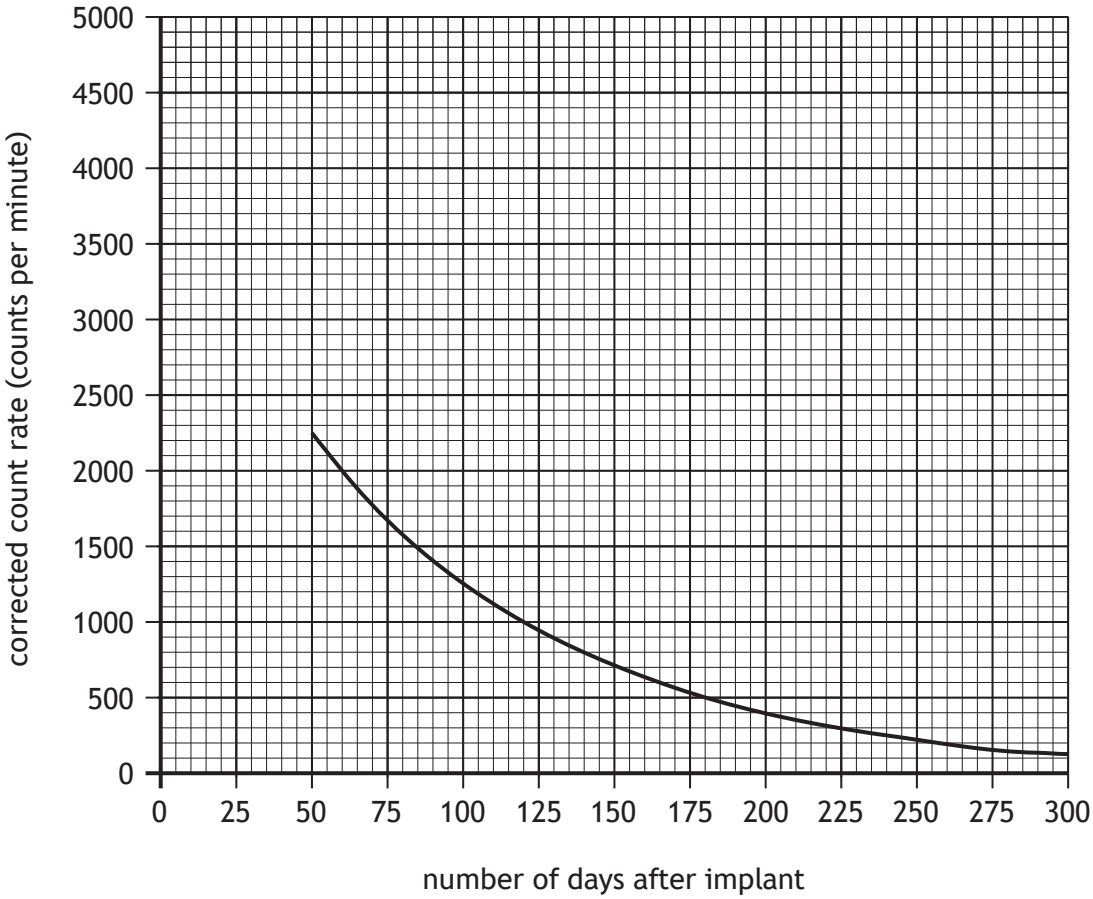

DO NOT WRITE IN THIS MARGIN

14. (continued)

MARKS | DO NOT WRITE IN THIS MARGIN

(a) (i) State the additional measurement that must have been made in order to determine the corrected count rate. **1**

(ii) Using the graph, determine the half-life of iodine-125. **1**

(iii) Determine the time it takes for the corrected count rate to reduce to one eighth of its initial value. **2**

Space for working and answer

(iv) Determine the initial corrected count rate of iodine-125 at the time it was implanted inside the patient. **1**

(b) State one other use of nuclear radiation. **1**

[END OF QUESTION PAPER]

X857750144

X857750145

MARKS | DO NOT WRITE IN THIS MARGIN

ADDITIONAL SPACE FOR ANSWERS AND ROUGH WORK

Additional diagram for use with question 2 (a)

Additional graph for use with question 2 (b) (ii)

X857750146

MARKS | DO NOT WRITE IN THIS MARGIN

ADDITIONAL SPACE FOR ANSWERS AND ROUGH WORK

Additional graph paper for use with question 7 (a) (i)

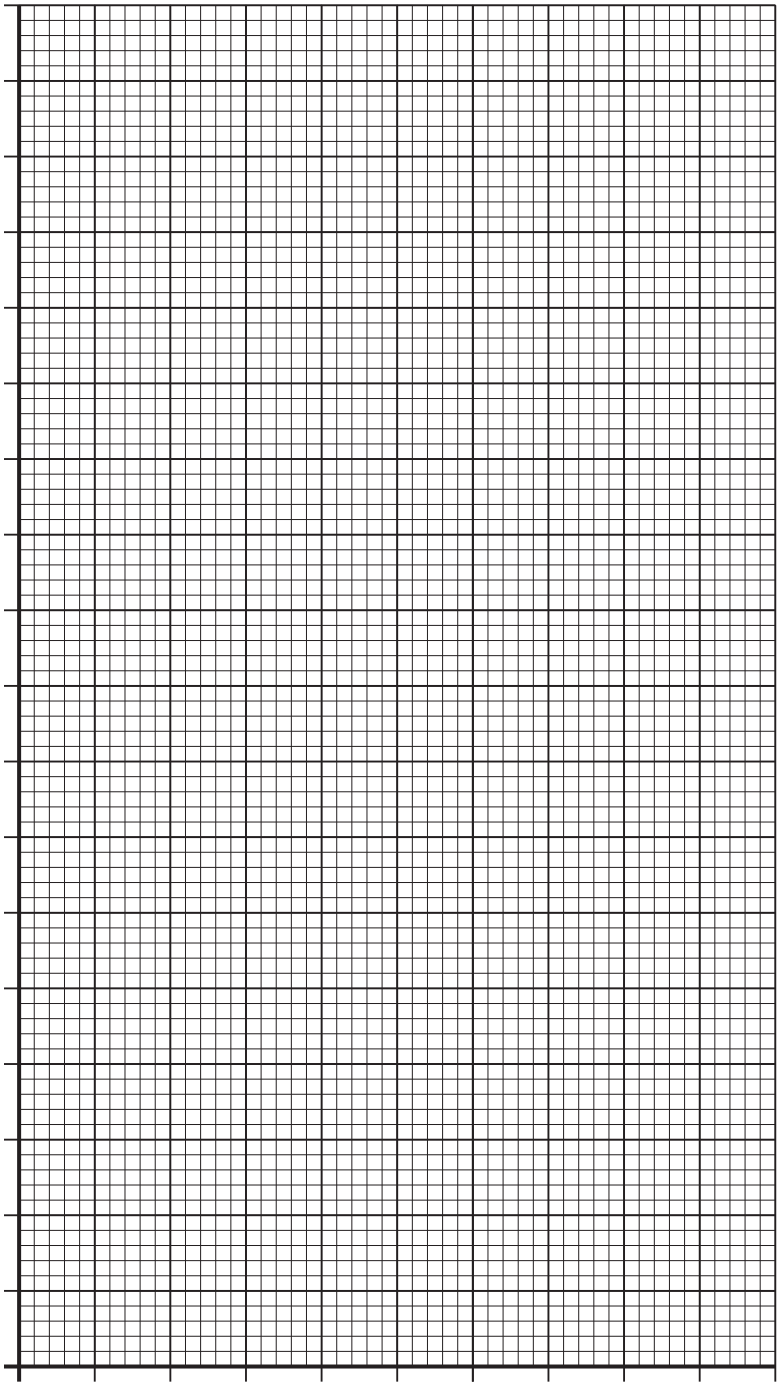

X857750147

MARKS | DO NOT WRITE IN THIS MARGIN

ADDITIONAL SPACE FOR ANSWERS AND ROUGH WORK

X857750148

MARKS | DO NOT WRITE IN THIS MARGIN

ADDITIONAL SPACE FOR ANSWERS AND ROUGH WORK

X857750149

[BLANK PAGE]

DO NOT WRITE ON THIS PAGE

X857750150

[BLANK PAGE]

DO NOT WRITE ON THIS PAGE

X857750151

[BLANK PAGE]

DO NOT WRITE ON THIS PAGE

Acknowledgement of copyright

Question 11 (c) (i)	Image by Sandeep Singh is adapted from pexels.com, https://www.pexels.com/photo/white-apple-earpods-on-red-surface-7156886/
Question 11 (c) (ii)	Roman Zaiets/shutterstock.com

X857750152