FOR OFFICIAL USE

N5

National Qualifications 2015

Mark

X735/75/01 Graphic Communication

THURSDAY, 30 APRIL

1:00 PM – 2:30 PM

X735750 1

Fill in these boxes and read what is printed below.

Full name of centre

Town

Forename(s)

Surname

Number of seat

Date of birth

Day Month Year

Scottish candidate number

Total marks — 60

Attempt ALL questions.

All dimensions are in mm.

All technical sketches and drawings use third angle projection.

You may use rulers, compasses or trammels for measuring.

Write your answers clearly in the spaces provided in this booklet. Additional space for answers is provided at the end of this booklet. If you use this space you must clearly identify the question number you are attempting.

Use **blue** or **black** ink.

Before leaving the examination room you must give this booklet to the Invigilator; if you do not, you may lose all the marks for this paper.

SQA ©

X735750101

[BLANK PAGE]

DO NOT WRITE ON THIS PAGE

X735750102

MARKS | DO NOT WRITE IN THIS MARGIN

1. "Birdy" is a new type of bird box produced by Bio, an environmentally conscious retailer. The lid and body are made from sheet metal. A CAD technician produced the rendered 3D CAD illustration and the pictorial line drawing shown below.

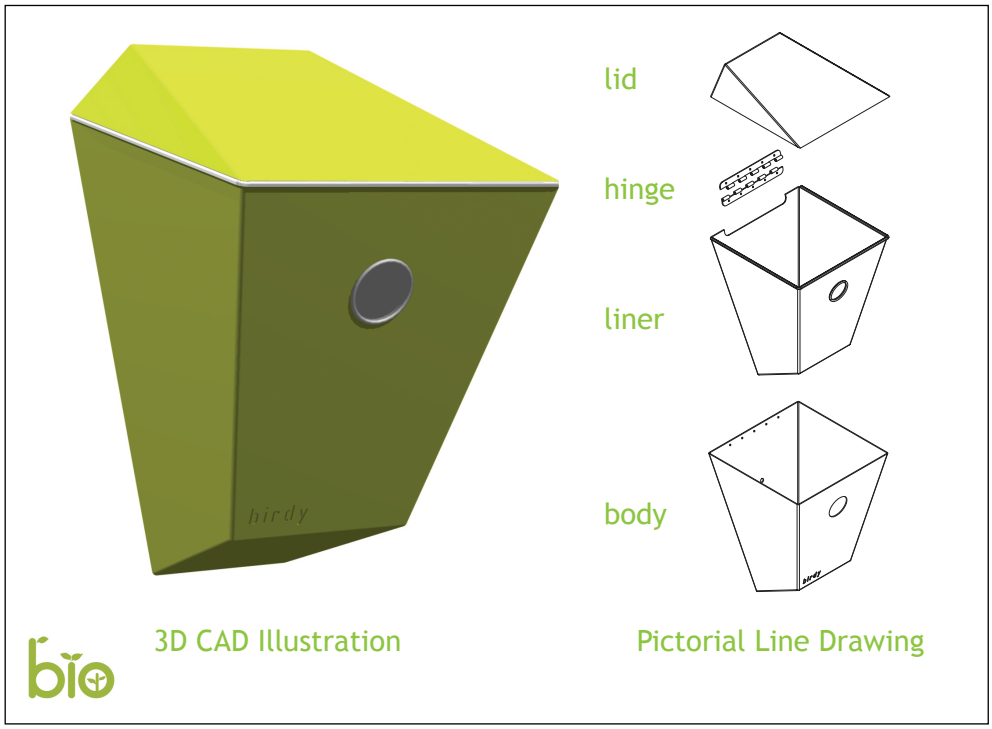

(a) State **two** reasons why the CAD technician would have produced the rendered 3D CAD illustration shown above. **2**

(b) State the type of pictorial line drawing shown above. **1**

(c) Describe **one** advantage that the pictorial line drawing has over the 3D CAD illustration. **1**

[Turn over

1. (continued)

The CAD technician initially created the 3D CAD illustration of the bird box. In preparing for manufacture the CAD technician has been asked to create the orthographic views shown below.

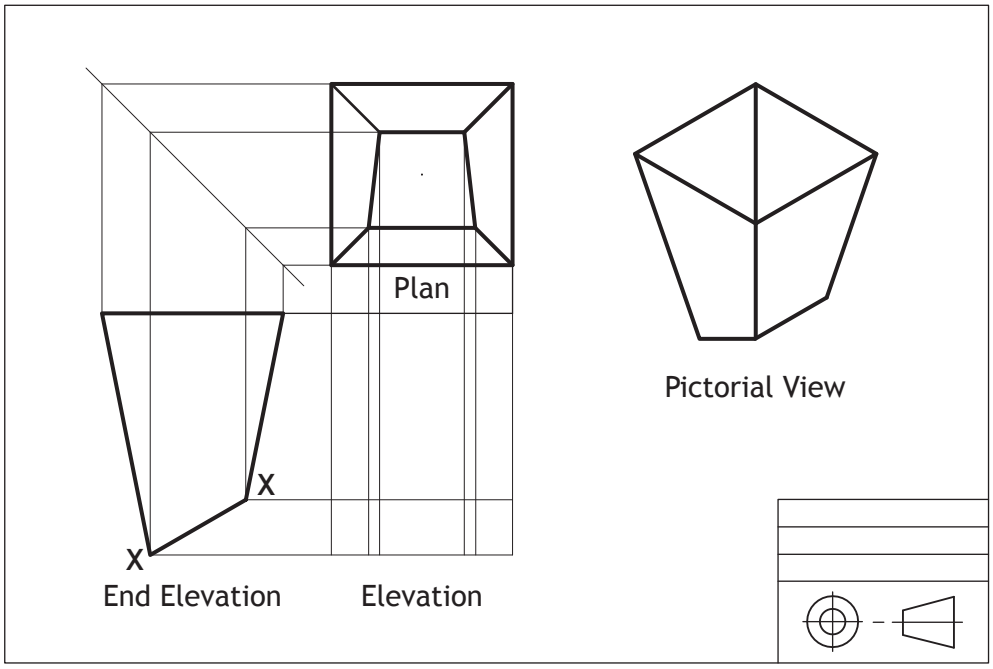

(d) Identify the correct elevation by ticking a box below, ignore wall thickness. **1**

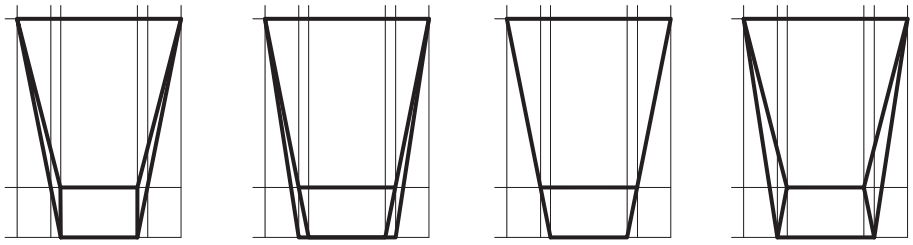

☐ ☐ ☐ ☐

(e) State **two** pieces of information you would find in a title block other than the 3rd angle projection symbol shown above. **2**

_____

_____

MARKS | DO NOT WRITE IN THIS MARGIN

1. (continued)

To assist in the manufacture of the body of the bird box, the CAD technician was asked to generate the true shape of sloping face X - X.

(f) Indicate using a tick (✓) the correct true shape. Use a ruler or trammel to measure. **1**

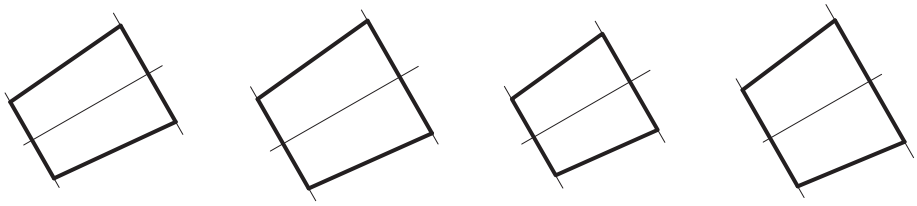

☐ ☐ ☐ ☐

To complete the 2D CAD drawings required for manufacture, the CAD technician has been asked to identify the placement of key features.

(g) Indicate on the sketch of the preliminary surface development below where the hole and hinge will be positioned.

Use "A" to indicate the hinge and "B" to indicate the entrance hole. **2**

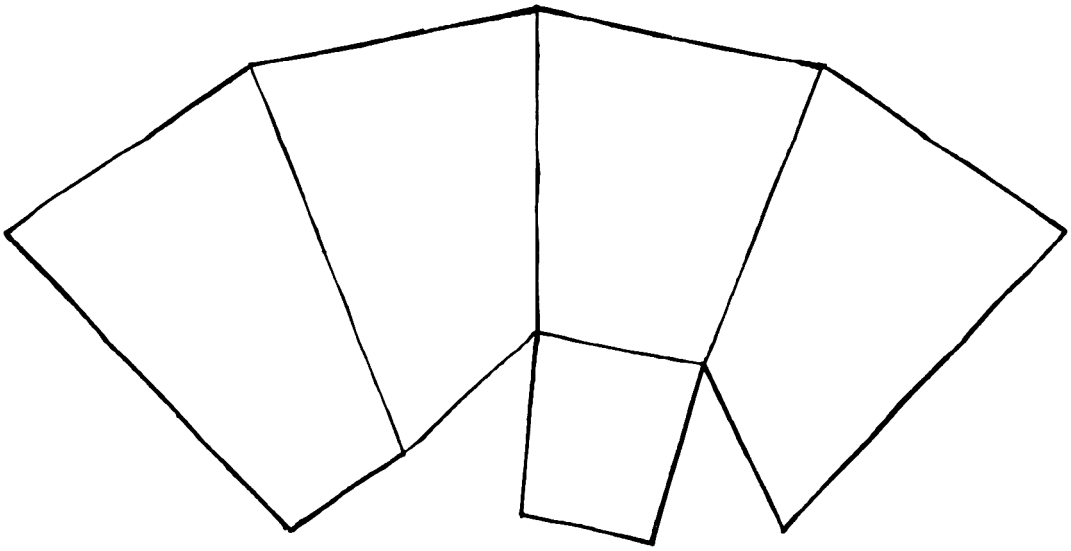

Preliminary sketch of the surface development

[Turn over

* X 7 3 5 7 5 0 1 0 5 *

MARKS | DO NOT WRITE IN THIS MARGIN

1. (continued)

Three line types that will be used to complete the 2D CAD drawings to British Standards Conventions are shown below.

(h) State the uses of the following line types:

(i) A continuous thick line. **1**

(ii) A chain thin double dashed line. **1**

(iii) A chain thin line. **1**

Prior to manufacture the CAD technician was asked to produce layouts for cutting the lid and body out of a single sheet of metal.

(i) Explain, in terms of environmental impact, why careful consideration of the layout of multiple parts is important. **1**

X735750106

MARKS | DO NOT WRITE IN THIS MARGIN

1. (continued)

A graphic designer was asked to create a 'point of sale' graphic that will be used in Bio's retail outlets to promote the bird box. The graphic designer was asked to communicate the environmental qualities of the brand. The finished graphic is shown below.

(j) Describe **two** ways that the designer has graphically communicated the environmental qualities of the brand. **2**

[Turn over

MARKS | DO NOT WRITE IN THIS MARGIN

2. "Module" is a shelving system consisting of two sizes of shelves and connecting hubs that can be arranged in a variety of ways. Rendered 3D CAD illustrations are shown below.

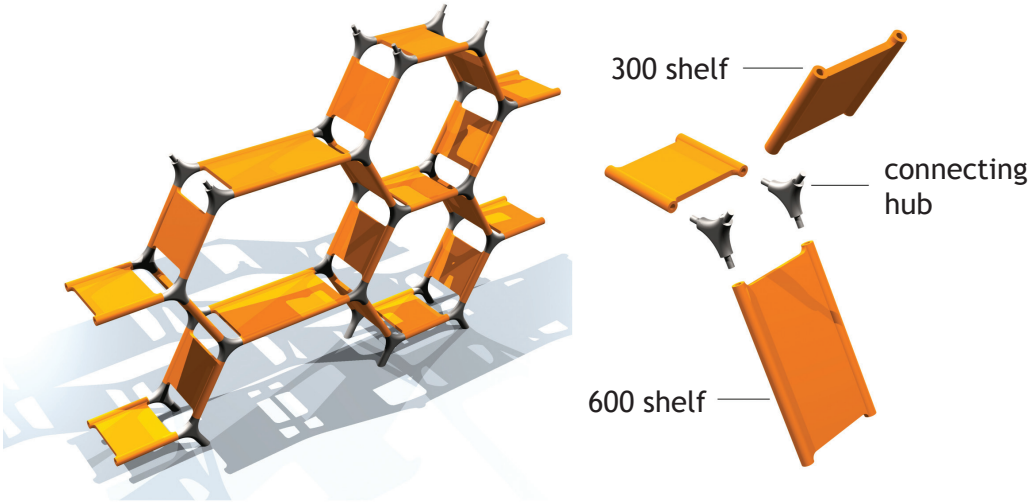

Rendered 3D CAD illustrations

An orthographic sketch of the connecting hub is shown below.

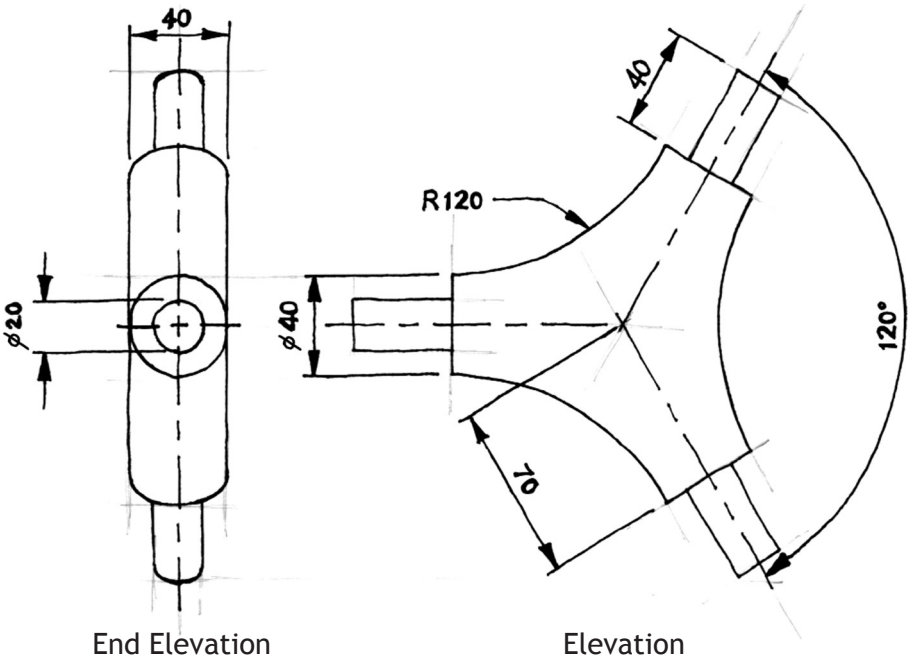

End Elevation

Elevation

MARKS | DO NOT WRITE IN THIS MARGIN

2. (continued)

(a) Describe, using the correct dimensions and 3D CAD modelling terms, how you would use 3D CAD software to model the hub. You may use sketches to support your answer. **6**

X735750109

2. (continued)

Orthographic assembly drawings of an arrangement of the shelving system are shown below.

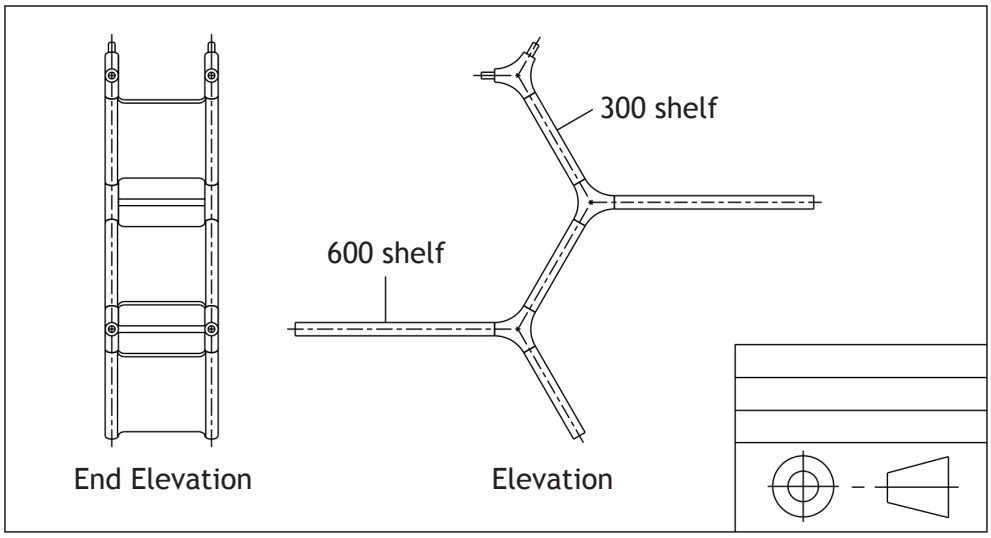

(b) Indicate using a tick (✓) the **two** pictorial assembly drawings that match the arrangement shown in the orthographic assembly drawing above. **2**

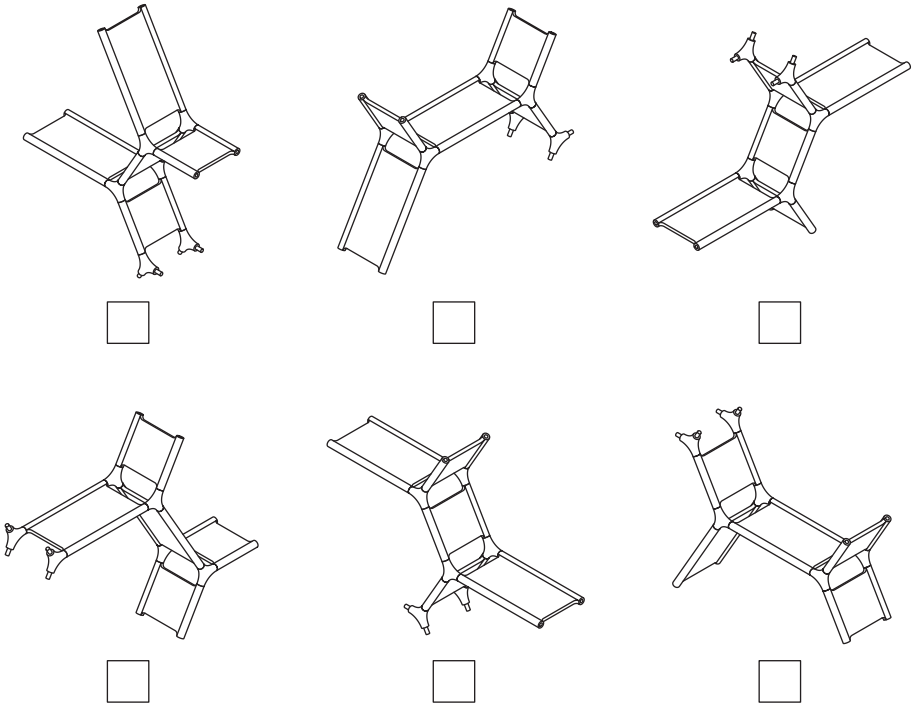

MARKS | DO NOT WRITE IN THIS MARGIN

2. (continued)

The CAD technician produced a variety of arrangements of the shelving system.

(c) State the CAD feature that would allow the CAD technician to produce a variety of assemblies quickly and efficiently. **1**

_____

[Turn over

X735750111

MARKS | DO NOT WRITE IN THIS MARGIN

3. "Toob" is a self assembly chair produced by FORM UK. The chair has been designed for ease of assembly using a **matching system**. Tubes with shaped hollow cores connect to corner brackets with matching pegs. Rendered 3D CAD illustrations of the assembled chair and a detail view showing the **matching system** are shown below.

detail showing peg and core matching system

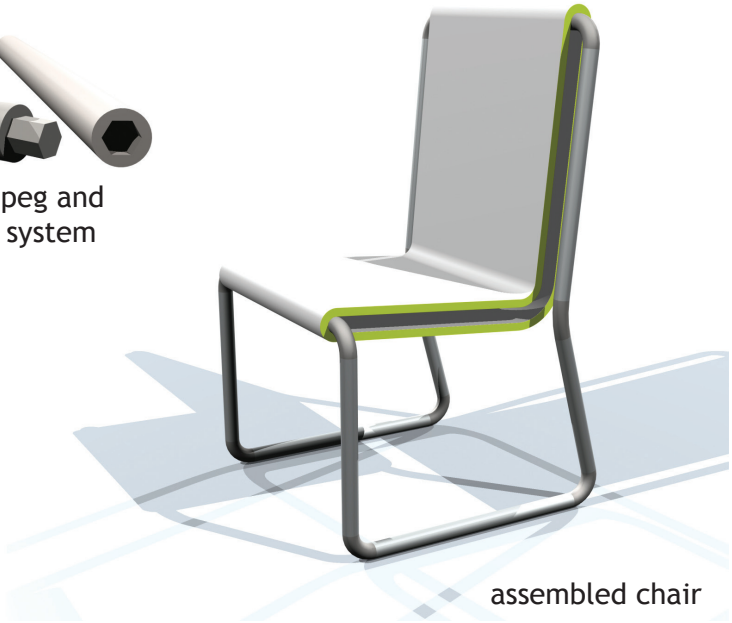

assembled chair

An exploded view, orthographic drawings and details of the matching system used for the three different lengths of tube that form the frame are shown on the **supplementary sheet for Question 3**.

A graphic designer has been tasked with constructing a parts list for the assembly instructions. An incomplete parts list is shown below.

(a) Indicate in the table below, the quantity of each type of corner bracket required and the shape of pegs that will be used for each.

Bracket 2 has been completed for you. **6**

	matching system	angle	Quantity
Bracket 1	/	90°	
Bracket 2	△ / □	20°	2
Bracket 3	/	106°	
Bracket 4	/	90°	

X735750112

MARKS | DO NOT WRITE IN THIS MARGIN

3. (continued)

Illustrated views of the 20° connecting bracket and a tube are shown below. There are three stages in the assembly of these components.

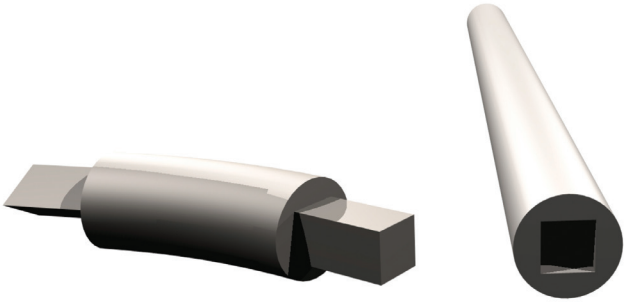

(b) Indicate by **shading** the relevant **surfaces** and state using 3D CAD terms how you would assemble and constrain the components shown above.

Stage one has been shaded for you. **5**

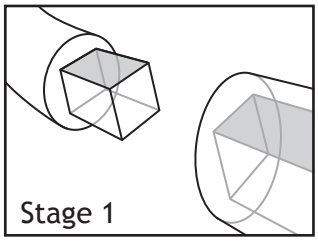

Constraint used _____

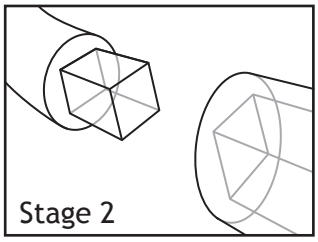

Constraint used _____

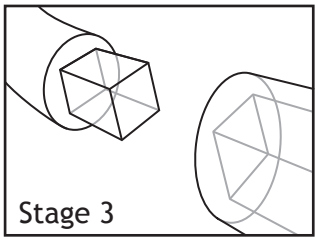

Constraint used _____

[Turn over

MARKS | DO NOT WRITE IN THIS MARGIN

3. (continued)

FORM UK have decided to launch the new chair at a number of international furniture trade shows. During the shows, promotional materials for the new chair will be distributed.

The designer was tasked with producing a postcard which met the following design specification:

The postcard must:

- Create impact.
- Encourage further exploration of the product.
- Provide basic details of function.
- Appeal to a target audience of 18–40 year old males and females.
- Create a modern layout.
- Create a sense of depth.

The final design is shown below.

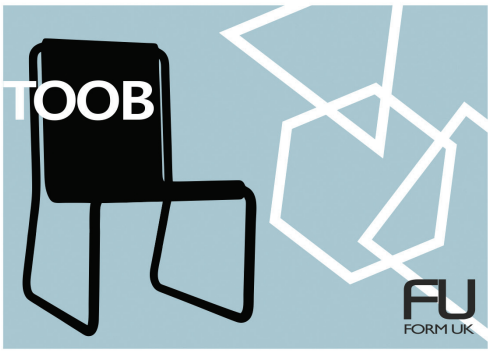

Front of postcard

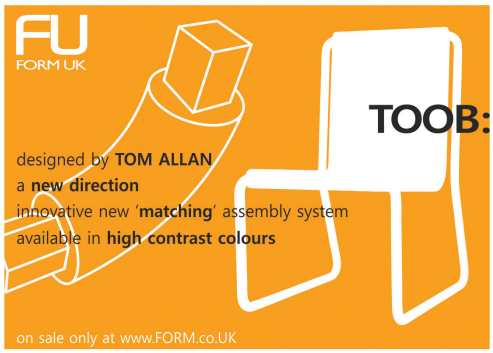

Back of postcard

FORM UK are happy that the above postcard meets all of the specification points.

(c) Describe how the postcard has met the specification points. **4**

_____

_____

_____

_____

_____

_____

* X 7 3 5 7 5 0 1 1 4 *

MARKS | DO NOT WRITE IN THIS MARGIN

3. (continued)

FORM UK commissioned the graphic designer to also develop a mobile app to launch the chair. The graphic designer was tasked with creating a layout that used similar graphic content to the postcard. An image of the finished app is shown below.

(d) Describe **two** advantages that an electronic promotional item gives the company over traditional promotional items. **2**

(e) Explain how the production of the app can be simplified by having the graphic elements already digitally produced. **2**

X735750115

MARKS | DO NOT WRITE IN THIS MARGIN

4. An extreme sports company, Equilibrium, have designed a new skateboard.

A CAD technician was provided with orthographic preliminary sketches of the wheel component.

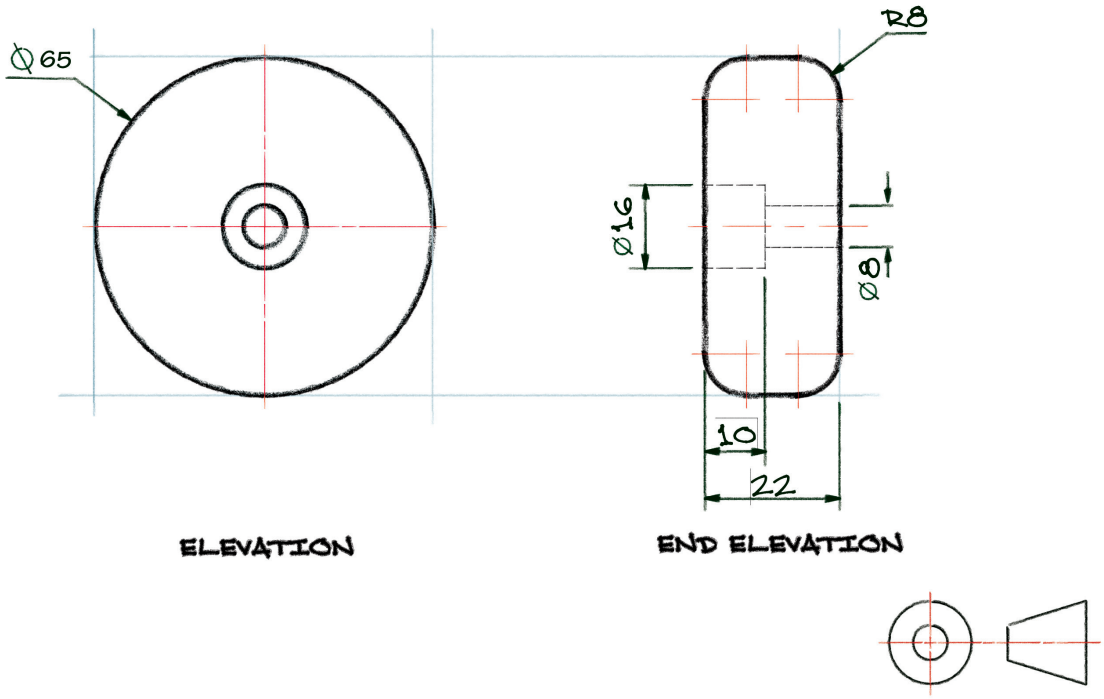

MARKS | DO NOT WRITE IN THIS MARGIN

4. (continued)

(a) Describe, with reference to correct dimensions and 3D CAD modelling terms, how you would use 3D CAD software to model the wheel.

You may use sketches to support your answer. **3**

X735750117

MARKS | DO NOT WRITE IN THIS MARGIN

4. (continued)

Equilibrium employed a graphic designer to produce point of sale displays for retail outlets. The point of sale includes a scaled up version of the skateboard used as a stand, holding four skateboards with graphics applied to it.

The designer produced two different ideas for use on the point of sale unit, shown on the **supplementary sheet for Question 4**.

X735750118

MARKS | DO NOT WRITE IN THIS MARGIN

4. (continued)

Equilibrium requested the graphic designer produce ideas that make use of alignment.

(b) Describe how the graphic designer has used the design principle of **alignment** in **both** of the ideas shown on the **supplementary sheet for Question 4**. **4**

Idea 1

Idea 2

(c) Describe how the graphic designer has used the following design principles in idea 1.

(i) Contrast **1**

(ii) Unity **1**

[Turn over

MARKS | DO NOT WRITE IN THIS MARGIN

4. (continued)

The design for the point of sale is to be printed on expensive glossy vinyl by an external printing company. The graphic designer produced a scaled down test print on A3 paper before sending to the external printing company.

(d) Describe **two** reasons why the graphic designer would do this. **2**

_____

_____

_____

X735750120

MARKS | DO NOT WRITE IN THIS MARGIN

4. (continued)

An exploded isometric and the working drawing of the bracket used to hold the skateboards to the display board are shown below.

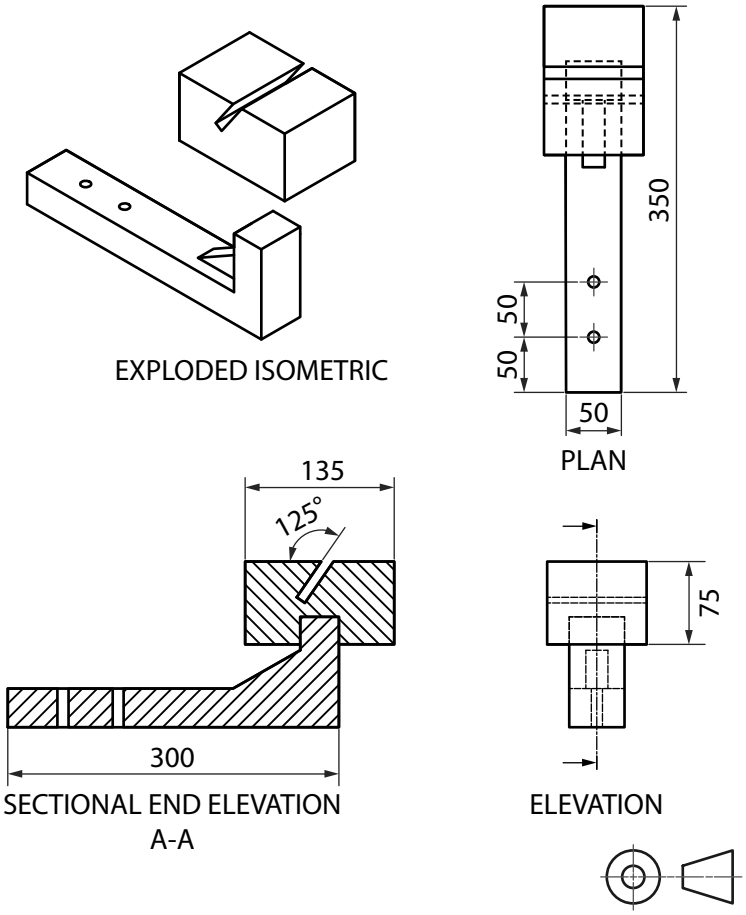

The CAD technician recognised **five** pieces of information in the working drawing that did not adhere to British Standard conventions.

(e) State the **five** errors found in the drawing.

You may annotate the drawing to support your answer. **5**

[END OF QUESTION PAPER]

* X 7 3 5 7 5 0 1 2 1 *

MARKS | DO NOT WRITE IN THIS MARGIN

ADDITIONAL SPACE FOR ANSWERS

X735750122

MARKS | DO NOT WRITE IN THIS MARGIN

ADDITIONAL SPACE FOR ANSWERS

X735750123

[BLANK PAGE]

DO NOT WRITE ON THIS PAGE

X735750124

N5 National Qualifications 2015

X735/75/11

Graphic Communication Supplementary Sheet

THURSDAY, 30 APRIL
1:00 PM – 2:30 PM

Supplementary Sheet for use with Questions 3 and 4.

SQA ©

X735751 1

Supplementary Sheet for use with Question 3.

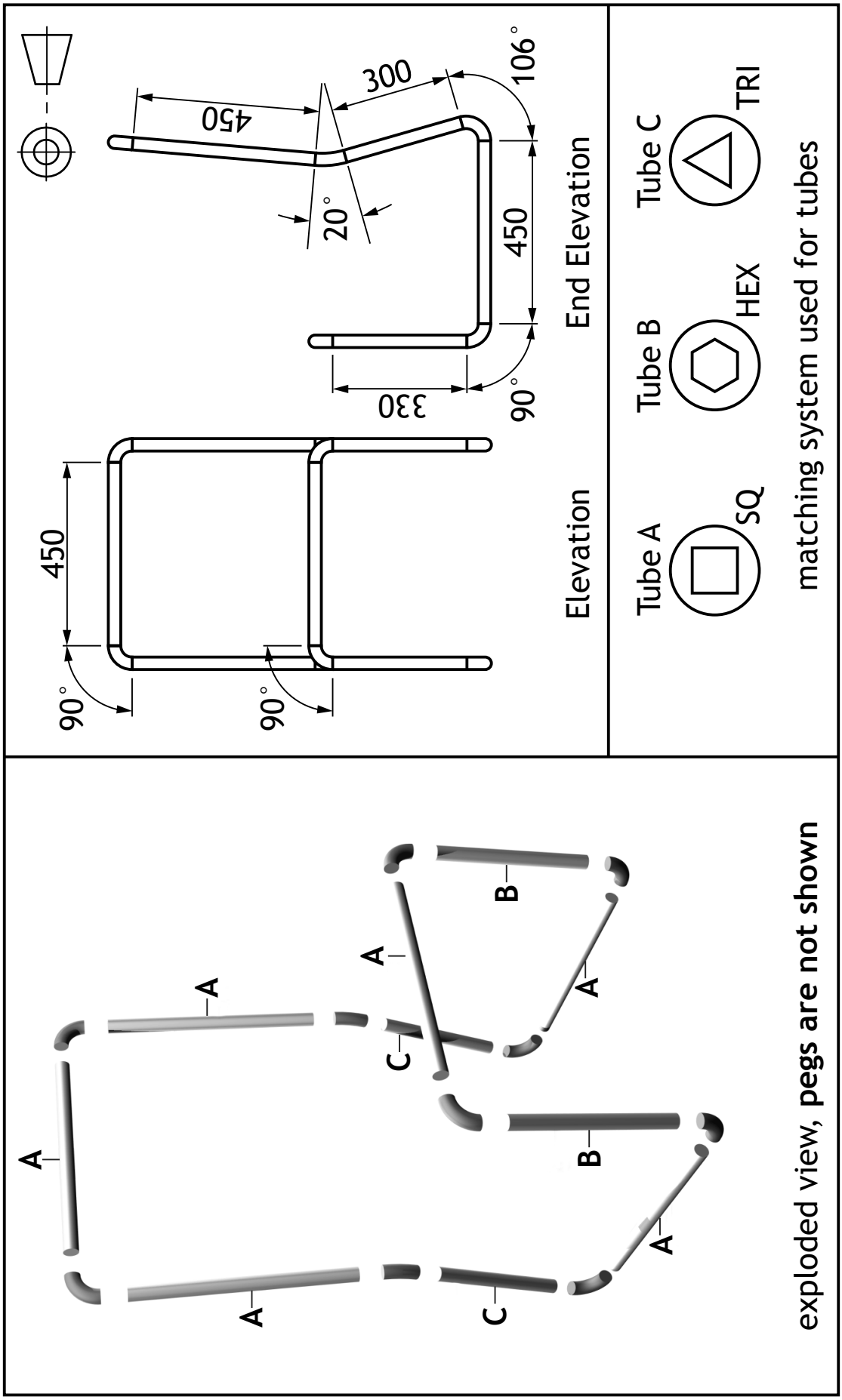

Supplementary Sheet for use with Question 4.

Idea 1

Idea 2

Page three

[BLANK PAGE]

DO NOT WRITE ON THIS PAGE

Looking for more resources? Visit https://sqa.my/ – Scotland's #1 Past Paper Archive