FOR OFFICIAL USE

N5

National Qualifications 2016

Mark

X723/75/01 Engineering Science

WEDNESDAY, 11 MAY

9:00 AM – 10:30 AM

X723750 1

Fill in these boxes and read what is printed below.

Full name of centre

Town

Forename(s)

Surname

Number of seat

Date of birth

Day Month Year

Scottish candidate number

Total marks — 90

SECTION 1 — 20 marks
Attempt ALL questions.

SECTION 2 — 70 marks
Attempt ALL questions.

Show all working and units where appropriate.

You should refer to the National 4/5 Engineering Science Data Booklet which you have been given.

The number of significant figures expressed in a final answer should be equivalent to the least significant data value given in the question. Answers that have two more figures or one less figure than this will be accepted.

Write your answers clearly in the spaces provided in this booklet. Additional space for answers is provided at the end of this booklet. If you use this space you must clearly identify the question number you are attempting.

Use **blue** or **black** ink.

Before leaving the examination room you must give this booklet to the Invigilator; if you do not, you may lose all the marks for this paper.

SQA ©

X723750101

MARKS | DO NOT WRITE IN THIS MARGIN

SECTION 1 — 20 marks

Attempt ALL questions

1. An automatic vacuum cleaner uses a proximity sensor to detect when it is getting close to walls or furniture. It will then move to avoid them.

The vacuum cleaner uses closed loop control.

Describe what is meant by closed loop control. **1**

2. Describe **two** advantages of a microcontroller based control system compared to a hard-wired electronic circuit. **2**

X723750102

MARKS | DO NOT WRITE IN THIS MARGIN

3. The logic diagram shown below forms part of a house alarm.

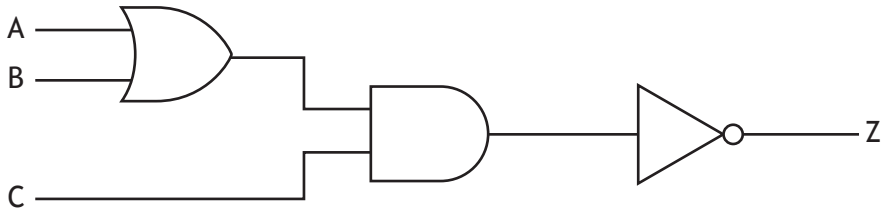

Complete the truth table for the logic circuit above. **3**

A	B	C	Z
0	0	0	
0	0	1	1
0	1	0	
0	1	1	0
1	0	0	1
1	0	1	
1	1	0	1
1	1	1	0

[Turn over

MARKS | DO NOT WRITE IN THIS MARGIN

4. A pneumatic door in a factory is being designed.

(a) Complete the diagram below to allow the door to open when valve A **or** B is actuated. **2**

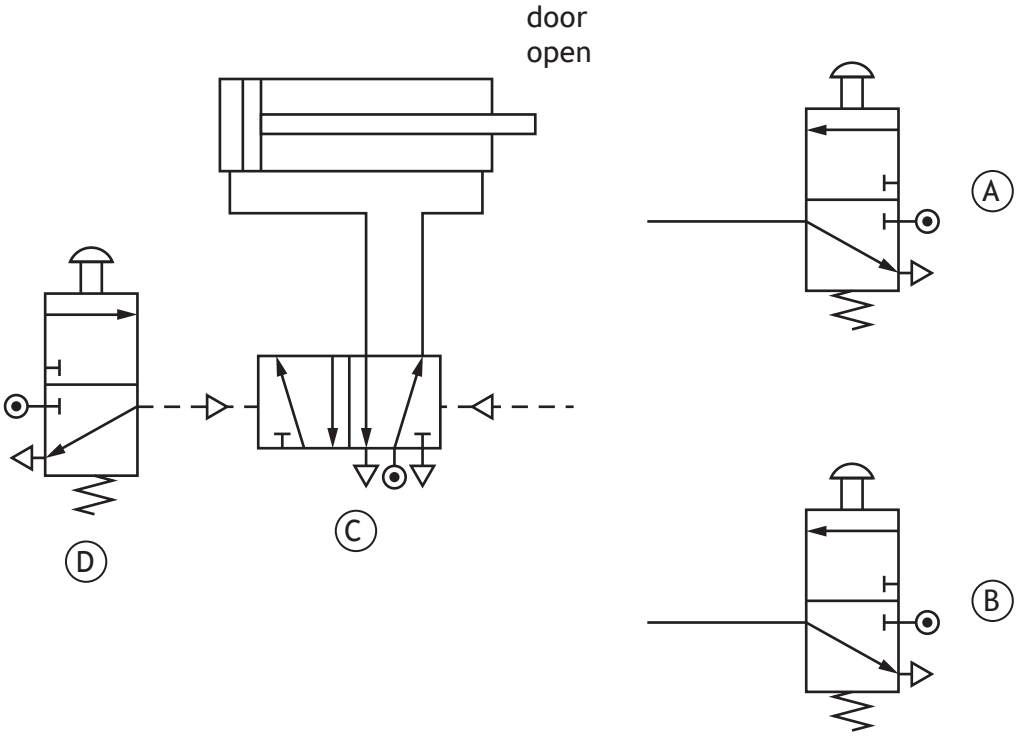

(b) State the name of the type of actuator used to control valve C. **1**

_____

5. State **two** pieces of information that should be given on a free body diagram. **2**

1 _____

2 _____

X723750104

MARKS | DO NOT WRITE IN THIS MARGIN

6. A diagram of part of a gear mechanism for an electric food mixer is shown below.

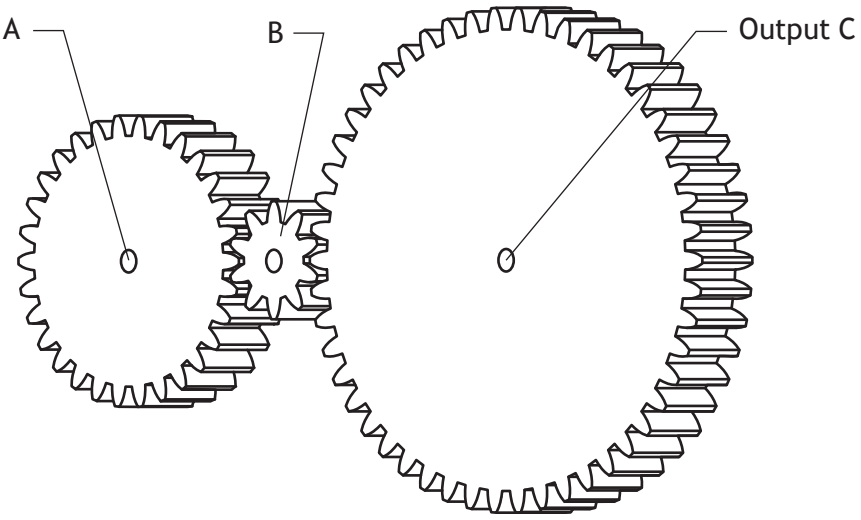

(a) (i) State the name of gear B. **1**

_____

(ii) Describe the function of gear B. **1**

_____

_____

(b) Calculate the velocity ratio when Input A rotates at 1200 revs min^{-1} and Output C has a speed of 720 revs min^{-1}. **2**

Show all working.

[Turn over

MARKS | DO NOT WRITE IN THIS MARGIN

7. A section from a structural member is shown in the diagram below.

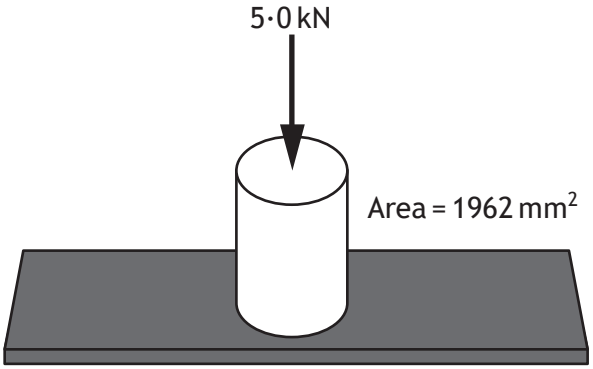

Calculate the stress acting on the member if a force of 5·0 kN is applied. **2**

Show all working and final unit.

MARKS | DO NOT WRITE IN THIS MARGIN

8. A diagram of part of a heating circuit is shown below.

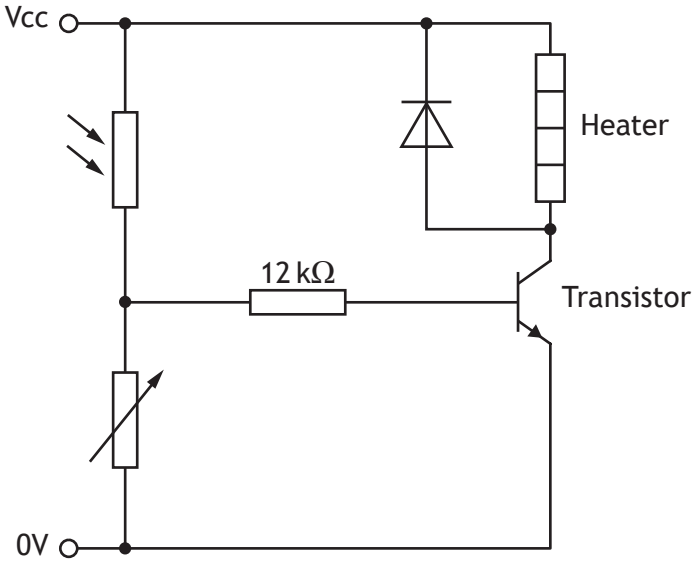

(a) State the **function** of the transistor. **1**

_____

(b) State the **function** of the 12 kΩ fixed resistor. **1**

_____

9. State what type of engineer would be responsible for **developing** the lubricants used in a gear drive. **1**

_____

[Turn over

* X 7 2 3 7 5 0 1 0 7 *

MARKS | DO NOT WRITE IN THIS MARGIN

SECTION 2 — 70 marks

Attempt ALL questions

10. A drone used to film sporting events is shown.

An electronic engineer was involved in the development of the drone.

(a) Describe **two** roles the electronic engineer may have had in the **development** of the drone. **2**

Part of the electronic circuit used in the drone is shown below.

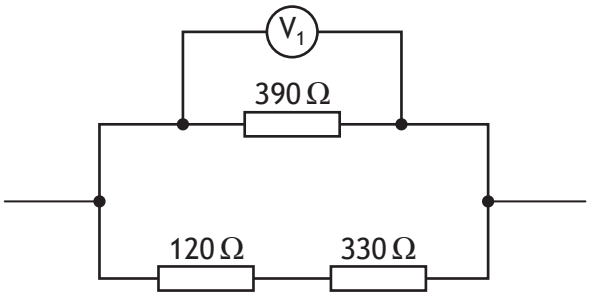

MARKS | DO NOT WRITE IN THIS MARGIN

10. (continued)

(b) Calculate the total resistance for the circuit shown. **3**

Show all working and final unit.

(c) Calculate the current through the 390 Ω resistor when the voltage V_1 is 12 V. **3**

Show all working and final unit.

10. (continued)

The cross-section of one of the drone's tubular support arms is shown below.

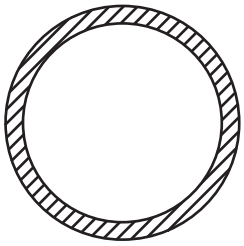

The stress in the support arm was found to be $0{\cdot}42\,\text{Nmm}^{-2}$ when a force of 310 N was applied.

(d) Calculate the cross-sectional area of the support arm. **3**

Show all working and final unit.

[Turn over for next question

DO NOT WRITE ON THIS PAGE

X723750111

MARKS | DO NOT WRITE IN THIS MARGIN

11. 3D printers allow individual users to quickly manufacture complex products from a computer model.

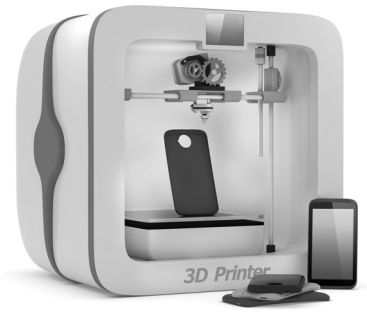

(a) (i) Describe a **positive** economic impact of a 3D printer. **1**

(ii) Describe a **negative** economic impact of a 3D printer. **1**

3D products are printed onto a heated platform. The platform is required to maintain a set temperature during the printing process.

(b) Complete the sub-system diagram below for the platform temperature. **3**

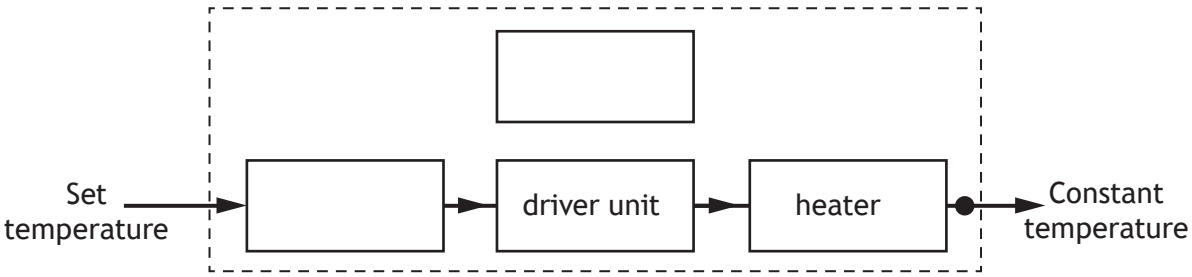

(c) Describe how feedback is used to maintain the platform's temperature. **2**

* X 7 2 3 7 5 0 1 1 2 *

11. (continued)

Part of the gear mechanism used in the 3D printer is shown below.

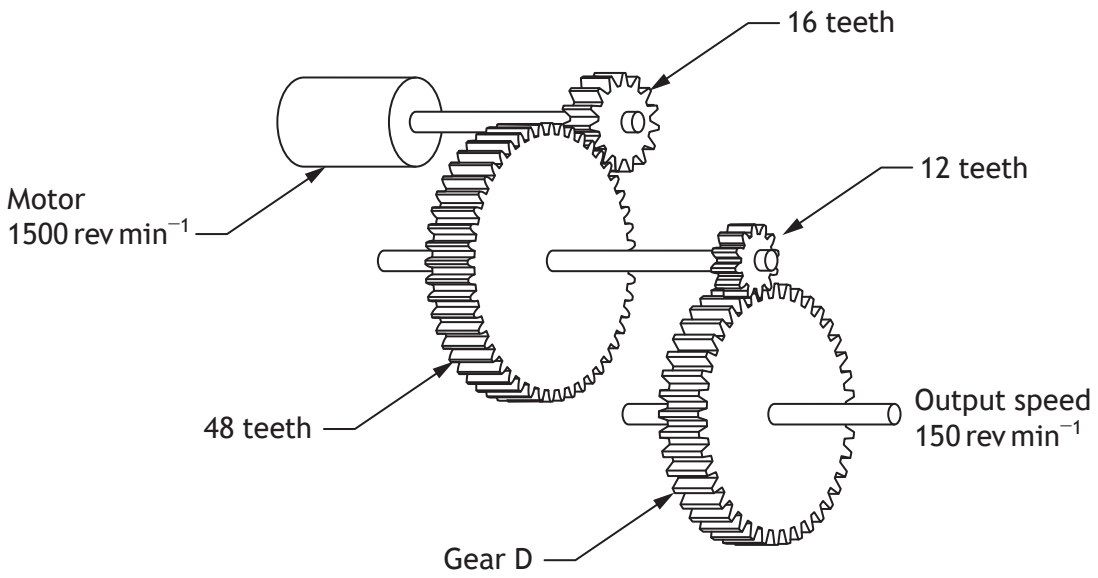

(d) Calculate the size of Gear D. **4**

Show all working.

12. A mechanical model of a dinosaur uses pneumatics to control its movement.

Part of the pneumatic circuit used in the model is shown below.

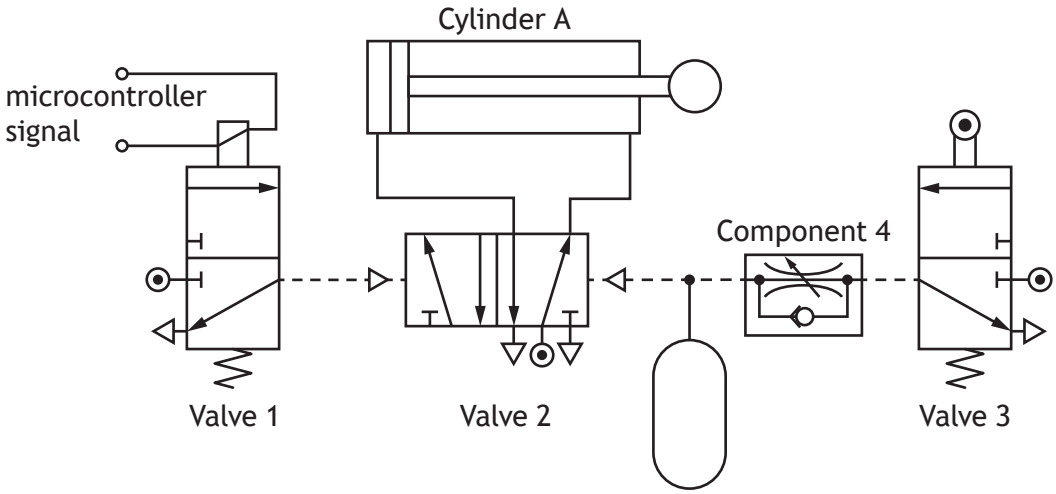

(a) Describe, using appropriate terminology, the operation of the circuit. **3**

When a signal is sent from the microcontroller _____

_____

_____

_____

_____

_____

(b) The circuit is to be altered so that the piston instrokes **slowly**.

Indicate, with an **X**, on the pneumatic circuit where a unidirectional restrictor should be connected. **1**

MARKS | DO NOT WRITE IN THIS MARGIN

12. (continued)

A microcontroller is used to operate the model in the sequence shown below.

1 When a start switch is activated the arms will move.
2 After 1·5 seconds the dinosaur will then roar for 1 second.
3 After another 0·5 seconds the arms should halt.
4 Steps 2 and 3 will repeat three times.
5 The sequence will then repeat.

Input/output connections to the microcontroller are shown in the table below.

Input Connection	Pin	Output Connection
	2	arms
	1	roar
start switch	0	

(c) Complete the flowchart for the control sequence with reference to the Data Booklet and input/output connections. Include **all** pin numbers. **8**

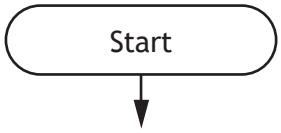

[Turn over

MARKS | DO NOT WRITE IN THIS MARGIN

13. A 12 kN gondola used to transport skiers up to the top of a mountain is shown below.

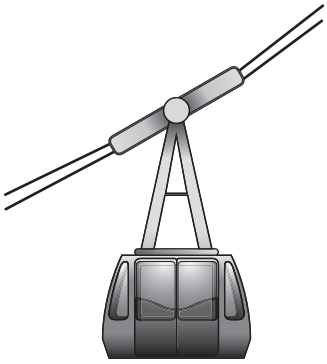

A diagram showing the forces acting on the supporting cable is shown below.

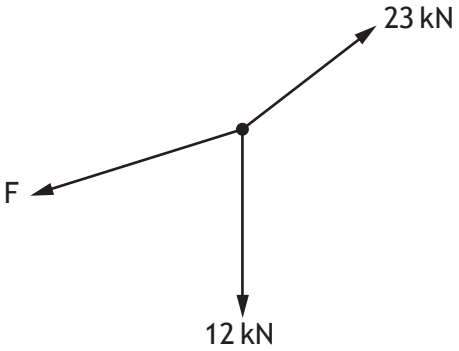

(a) Determine, by completing the scale drawing of the triangle of forces below, the **size** of force F in the supporting cable. **1**

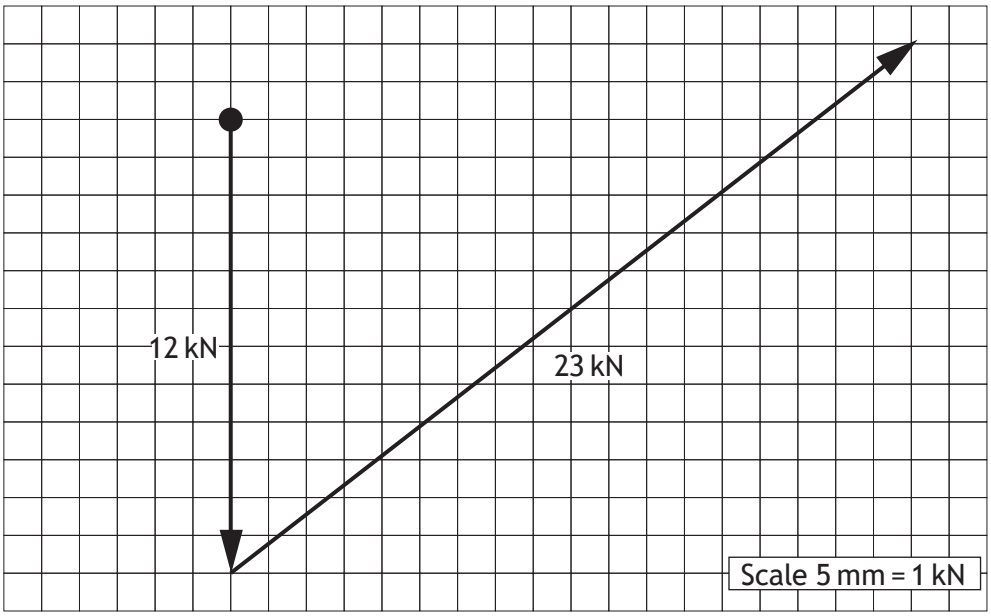

F = _____ kN

* X 7 2 3 7 5 0 1 1 6 *

13. (continued)

The cable has a strain of 0·00030 and an original length of 127 m.

(b) Calculate the change in length of the cable. **3**

Show all working and final unit.

(c) Explain the environmental impact during the **construction** of the gondola system. **2**

(d) An electronic circuit is used as part of the gondola's safety system. The Boolean equation used to describe its operation is shown.

$$(\overline{A} \cdot B) + (B \cdot \overline{C}) = Z$$

Complete the logic diagram for the Boolean equation. **3**

MARKS | DO NOT WRITE IN THIS MARGIN

14. Water is pumped to the top of a slide.

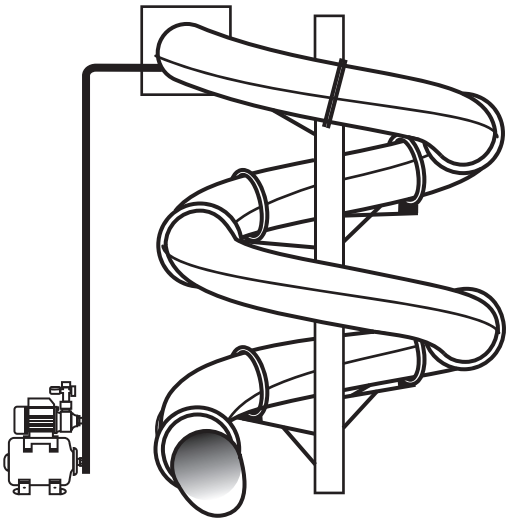

The pump used is rated at 13 A, 230 V.

(a) Calculate the electrical energy supplied to the pump in one minute. **2**
Show all working and final unit.

* X 7 2 3 7 5 0 1 1 8 *

MARKS | DO NOT WRITE IN THIS MARGIN

14. (continued)

The pump was found to be 64 % efficient.

(b) Calculate the output energy of the pump in one minute. **3**

Show all working and final unit.

(c) Explain how the efficiency of the pump could be increased. **2**

A mechanical engineer used computer simulation when designing the pump.

(d) Describe an advantage of using computer simulation during the design of the pump. **1**

[Turn over

MARKS | DO NOT WRITE IN THIS MARGIN

15. The temperature inside an incubator used in a hospital should be kept at a set level.

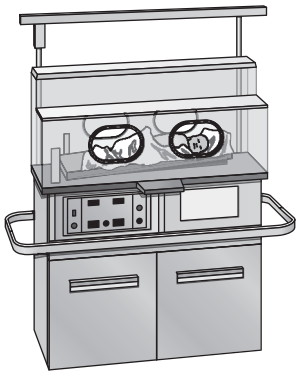

The electronic circuit used in the incubator is shown below.

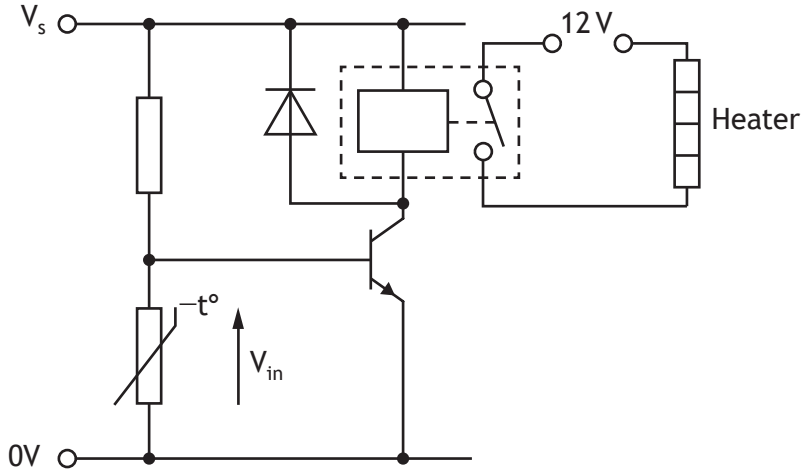

(a) Explain the operation of the electronic circuit. **4**

As the temperature decreases _____

_____

_____

_____

_____

_____

_____

_____

MARKS | DO NOT WRITE IN THIS MARGIN

15. (continued)

(b) Explain the purpose of the diode in the circuit. **2**

The fixed resistor in the circuit is replaced with a variable resistor.

(c) Describe an advantage of using a variable resistor instead of a fixed resistor in the circuit. **1**

The new sensing sub-system is shown below.

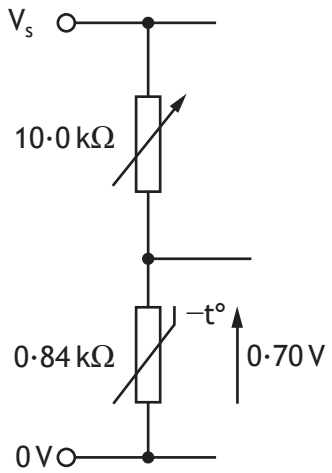

(d) Calculate the voltage across the variable resistor. **3**

Show all working and final unit.

MARKS | DO NOT WRITE IN THIS MARGIN

16. A cherry picker is used to access high areas.

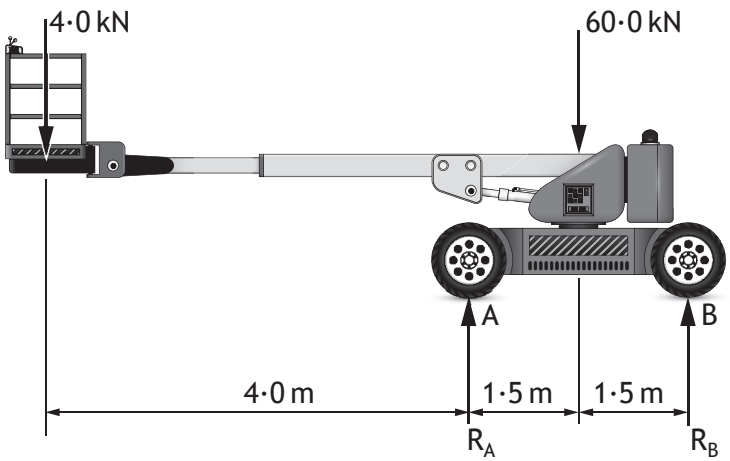

A free body diagram of the cherry picker is shown below.

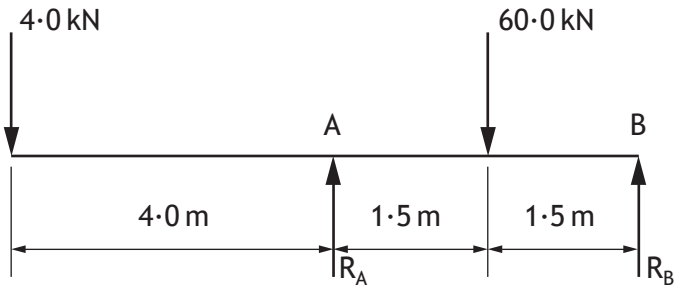

(a) Calculate, by taking moments about B, the reaction force R_A. **3**

Show all working and final unit.

MARKS | DO NOT WRITE IN THIS MARGIN

16. (continued)

(b) Calculate the force R_B. **2**

Show all working and final unit.

When in use, the platform is raised to the position shown below. A structural engineer analyses the nature of the forces acting on members D and E.

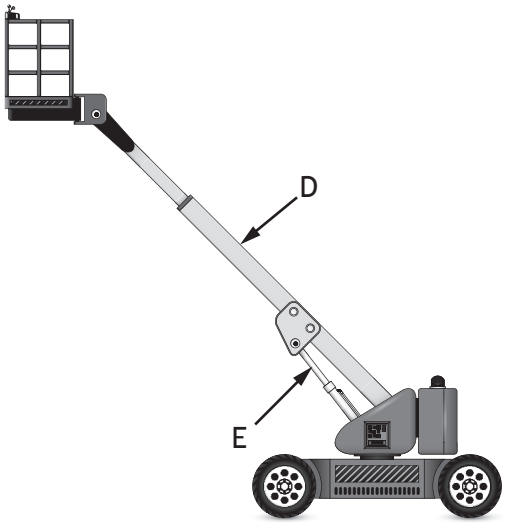

(c) State the nature of the force in member: **2**

D _____

E _____

The cherry picker uses electricity as its power source.

(d) Explain how electric vehicles can contribute towards reducing the environmental effect of climate change. **2**

_____

_____

_____

[END OF QUESTION PAPER]

* X 7 2 3 7 5 0 1 2 3 *

MARKS | DO NOT WRITE IN THIS MARGIN

ADDITIONAL SPACE FOR ANSWERS

X723750124

MARKS | DO NOT WRITE IN THIS MARGIN

ADDITIONAL SPACE FOR ANSWERS

X723750125

[BLANK PAGE]

DO NOT WRITE ON THIS PAGE

X723750126

[BLANK PAGE]

DO NOT WRITE ON THIS PAGE

X723750127

ACKNOWLEDGEMENTS

Section 1 Question 1 – John Kasawa/shutterstock.com

Section 2 Question 10 – Alexander Kolomietz/shutterstock.com

Section 2 Question 11 - Bobboz/shutterstock.com

Section 2 Question 12 – metha 1819/shutterstock.com

Section 2 Question 13 - viewgene/shutterstock.com

Section 2 Question 15 – phil Holmes/shutterstock.com

Section 2 Question 16 - LovePHY/shutterstock.com

X723750128