FOR OFFICIAL USE

N5

National Qualifications 2015

Mark

X723/75/01 Engineering Science

TUESDAY, 12 MAY

1:00 PM – 2:30 PM

X723750 1

Fill in these boxes and read what is printed below.

Full name of centre

Town

Forename(s)

Surname

Number of seat

Date of birth

Day Month Year

Scottish candidate number

Total marks — 90

SECTION 1 —20 marks

Attempt ALL questions.

SECTION 2 —70 marks

Attempt ALL questions.

Show all working and units where appropriate.

You should refer to the National 4/5 Engineering Science Data Booklet which you have been given.

Write your answers clearly in the spaces provided in this booklet. Additional space for answers is provided at the end of this booklet. If you use this space you must clearly identify the question number you are attempting

Use **blue** or **black** ink.

Before leaving the examination room you must give this booklet to the Invigilator; if you do not, you may lose all the marks for this paper.

SQA ©

X723750101

MARKS | DO NOT WRITE IN THIS MARGIN

SECTION 1 — 20 marks

Attempt ALL questions

1. Complete the circuit diagram below to show a motor operated when one switch or another switch is pressed. **2**

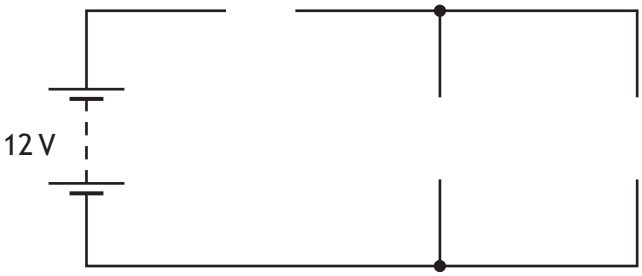

2. An electric torch is shown in the diagram below. The lamp is rated at 7·2 V and 0·7 A.

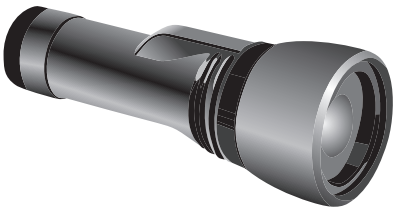

Calculate the resistance of the lamp. **2**

Show all working and final unit.

MARKS | DO NOT WRITE IN THIS MARGIN

3. A diagram for a heating system is shown below.

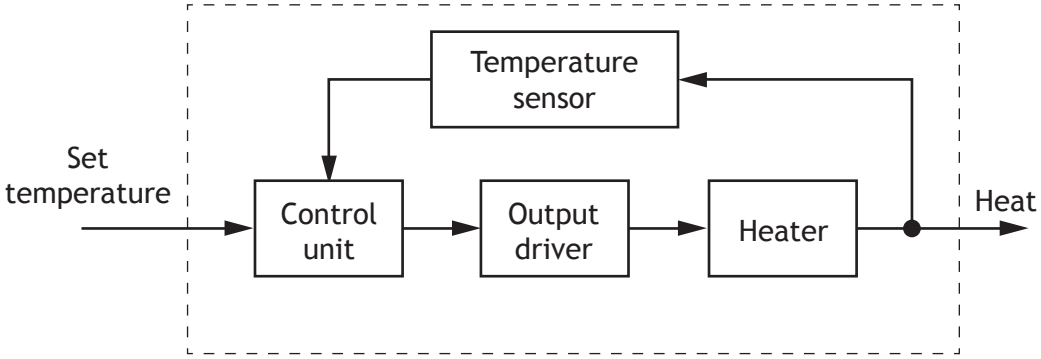

(a) State the name of this type of diagram. **1**

_____

(b) State the function of the output driver. **1**

_____

_____

[Turn over

MARKS | DO NOT WRITE IN THIS MARGIN

4. A motorised coffee grinder uses a simple gear train.

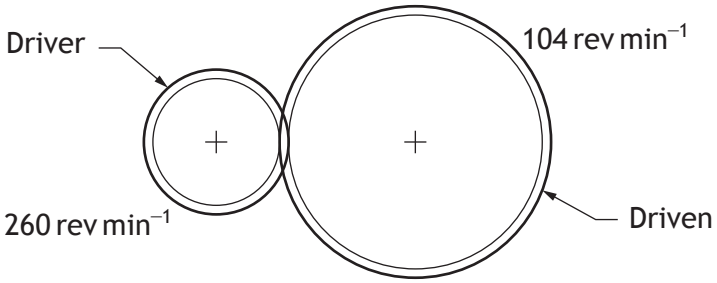

(a) Calculate the velocity ratio of the gear train. **2**

Show all working and final unit.

(b) Describe how the simple gear drive could be altered to make the driver and driven gears turn in the same direction. **1**

_____

_____

* X 7 2 3 7 5 0 1 0 4 *

MARKS | DO NOT WRITE IN THIS MARGIN

5. Microcontrollers are often used in place of hard wired electronic circuits in control systems.

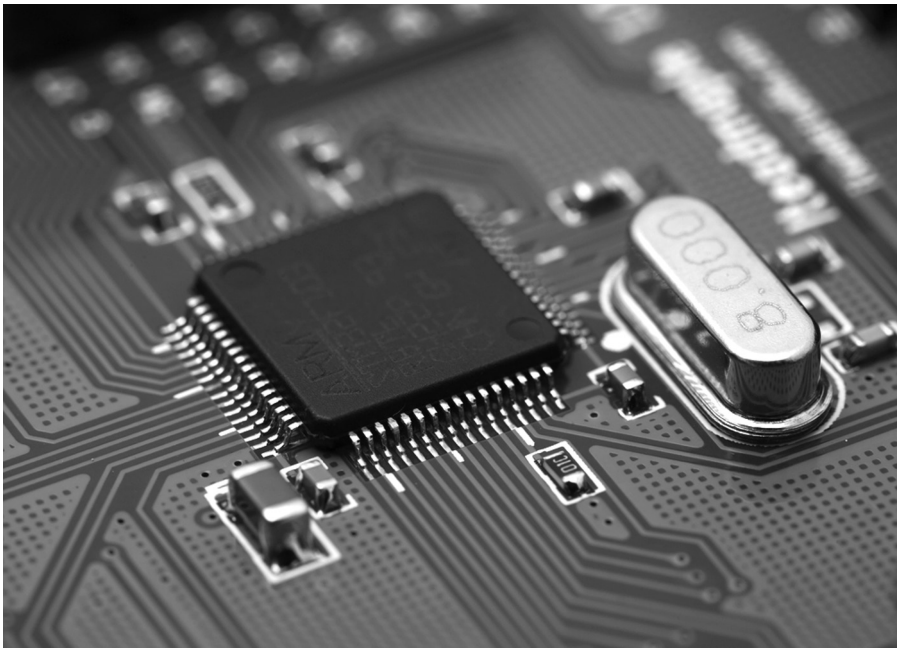

Describe an advantage of a microcontroller over a hard wired circuit for:

(a) a design engineer; **1**

(b) a manufacturer during the production of the control system. **1**

[Turn over

MARKS | DO NOT WRITE IN THIS MARGIN

6. An incomplete pneumatic circuit to produce reciprocating motion is shown in the diagram below.

Complete the diagram by inserting the missing piping. **2**

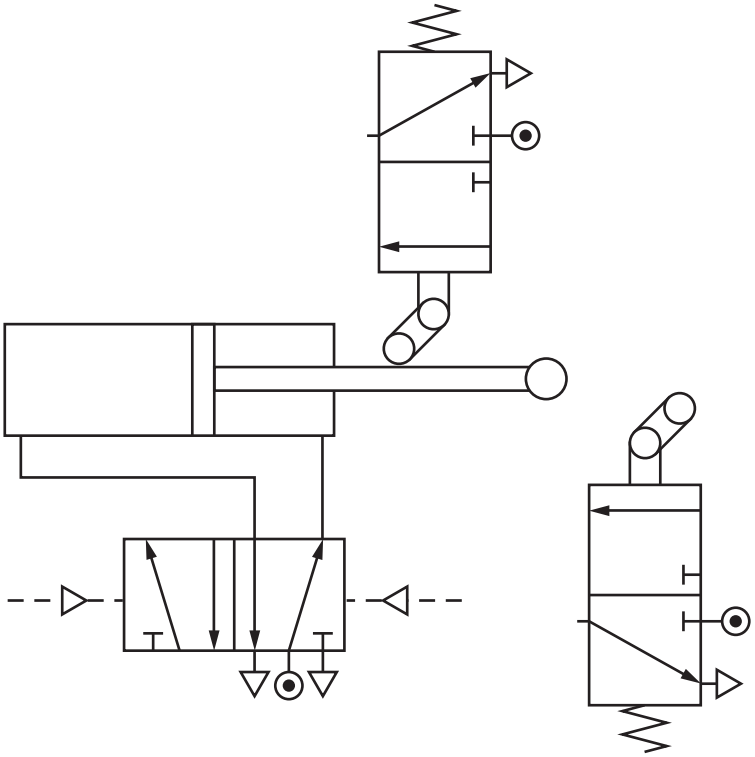

7. An electronic circuit to control the operation of a motor is shown in the diagram below.

Complete the circuit by adding a diode to protect the transistor. **2**

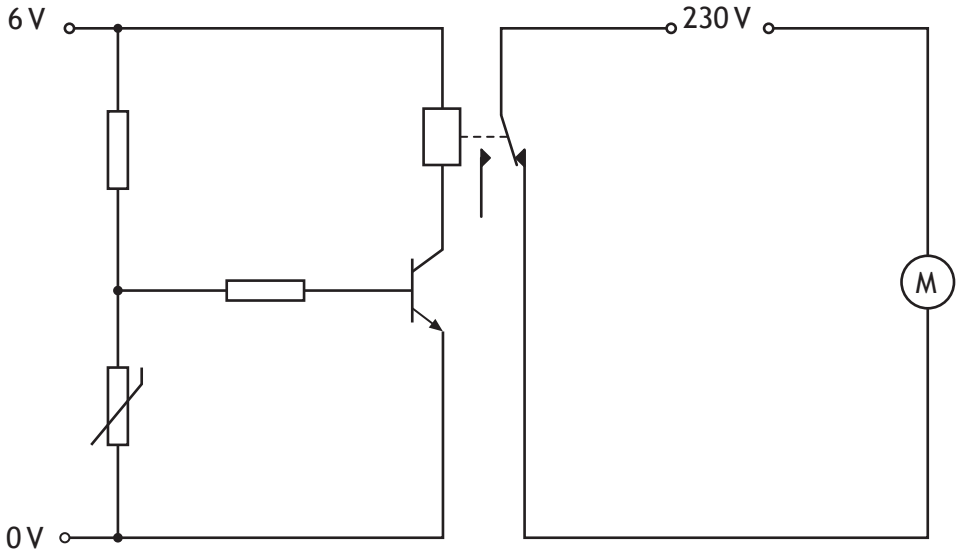

X723750106

MARKS | DO NOT WRITE IN THIS MARGIN

8. A geothermal power station is shown below.

Describe the role of:

(a) a mechanical engineer during the **design** of the power station; **1**

(b) a civil engineer during the **construction** of the power station; **1**

(c) an electrical engineer during the **monitoring** of the power station. **1**

[Turn over

* X 7 2 3 7 5 0 1 0 7 *

MARKS | DO NOT WRITE IN THIS MARGIN

9. A crane is used to lift a 3000 N load. Detail of the end of the crane is shown below.

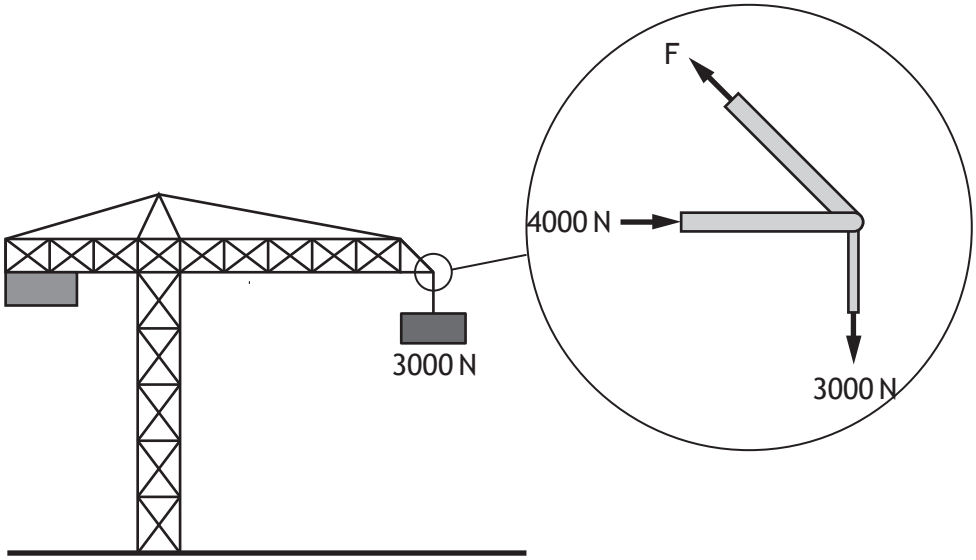

With reference to the crane shown above:

(a) complete the triangle of forces scale drawing below; **1**

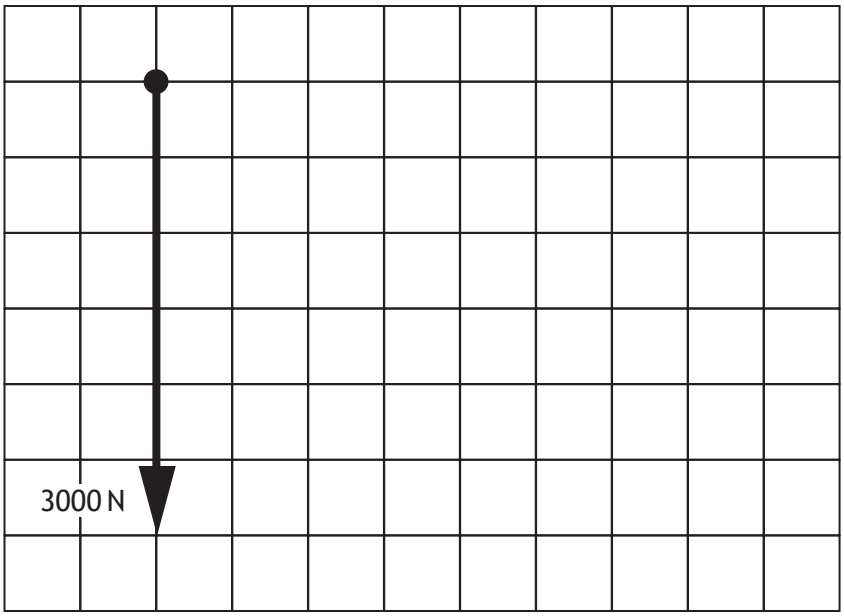

10 mm = 500 N

(b) determine, using the given scale, the size of force F. **1**

F = _____

[Turn over for Section 2 on *Page ten*

DO NOT WRITE ON THIS PAGE

X723750109

MARKS | DO NOT WRITE IN THIS MARGIN

SECTION 2 — 70 marks

Attempt ALL questions

10. A wind farm is shown below.

(a) (i) Describe **one** positive environmental impact of a wind farm. **1**

(ii) Describe **one** negative environmental impact of a wind farm. **1**

(iii) Explain an **economic** impact of using a wind farm to produce electricity. **2**

MARKS | DO NOT WRITE IN THIS MARGIN

10. (continued)

A wind turbine can only be used when the wind speed is below a maximum safe level. A diagram for part of the braking system is shown below.

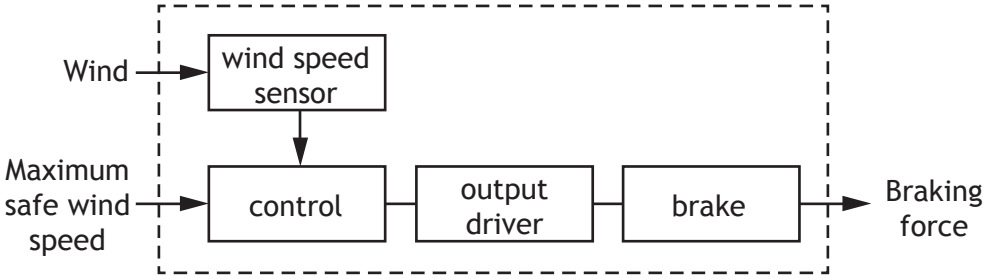

(b) Describe, using appropriate terminology, the operation of the wind turbine braking system. **3**

[Turn over

MARKS | DO NOT WRITE IN THIS MARGIN

10. (continued)

A pupil's model of the wind turbine's compound gear train is shown in the diagram below.

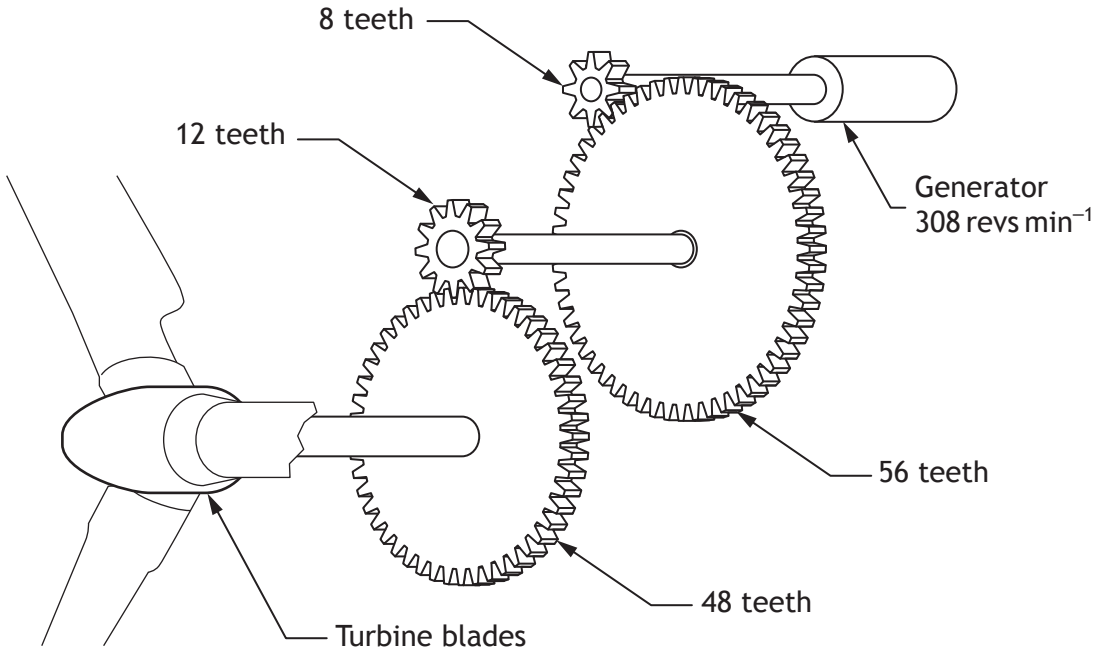

(c) Describe an advantage of using a compound gear train over a simple gear train. **1**

_____

_____

MARKS | DO NOT WRITE IN THIS MARGIN

10. (continued)

(d) Calculate the speed of the turbine blade. **4**

Show all working and final unit.

[Turn over

MARKS | DO NOT WRITE IN THIS MARGIN

11. A lifeboat winching system on a cruise ship is shown below.

A lifeboat of mass 7750 kg is lowered into the water.

(a) Calculate the kinetic energy of the lifeboat as it enters the water at $3\,ms^{-1}$. **2**

Show all working and final unit.

The lifeboat is winched back up to its starting position 15 m above the water level.

(b) Calculate, showing all working and final unit:

(i) the potential energy of the lifeboat; **2**

* X 7 2 3 7 5 0 1 1 4 *

MARKS | DO NOT WRITE IN THIS MARGIN

11. (b) (continued)

(ii) the efficiency of the system when the input energy to the winch is 2·50 MJ. **2**

(c) Explain why the winching system is not 100% efficient. **2**

The rope used to raise the lifeboat has a length of 15 m.

(d) Calculate the change in length of the rope when the resulting strain is 0·00375. **3**

Show all working and final unit.

[Turn over

MARKS | DO NOT WRITE IN THIS MARGIN

12. The circuit used in a bicycle light is shown below.

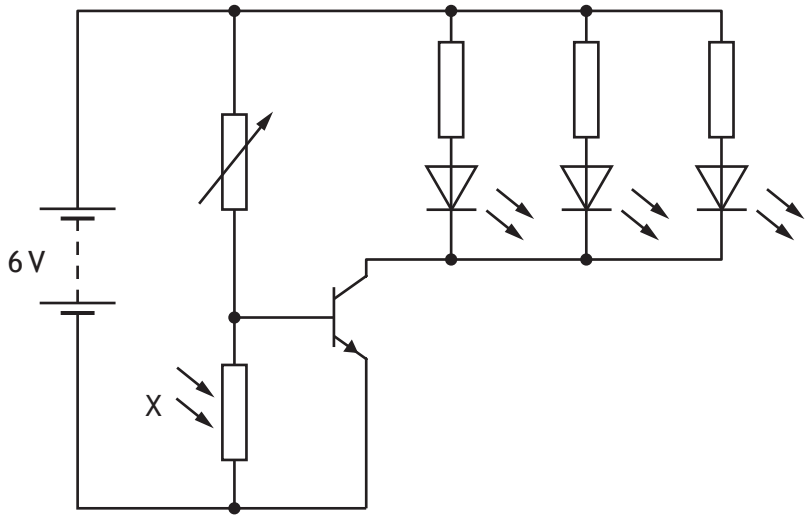

(a) State the **full** name of component X shown in the circuit. **1**

(b) Describe the operation of the circuit. **4**

(c) (i) Describe one advantage of wiring the LEDs in parallel rather than in series. **1**

(ii) Describe why LEDs were used in preference to lamps. **1**

* X 7 2 3 7 5 0 1 1 6 *

MARKS | DO NOT WRITE IN THIS MARGIN

12. (continued)

The sensing sub-system used in the operation of the bicycle light is shown below.

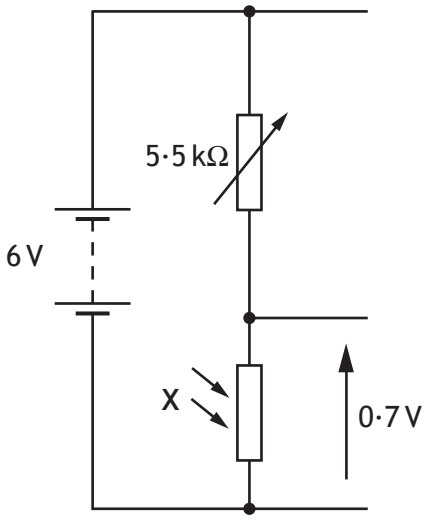

(d) Calculate the resistance of component **X**. **4**

Show all working and final unit.

[Turn over

13. A rollercoaster is shown below.

MARKS | DO NOT WRITE IN THIS MARGIN

(a) Describe two tasks a structural engineer would undertake during the **design** of the rollercoaster's structure.

1 _____ **1**

_____

2 _____ **1**

_____

An electronic engineer used computer simulation during the design of the rollercoaster.

(b) State one feature of the **rollercoaster** design that the electronic engineer would simulate. **1**

_____

The logic diagram for part of the electronic control system used in the rollercoaster is shown below.

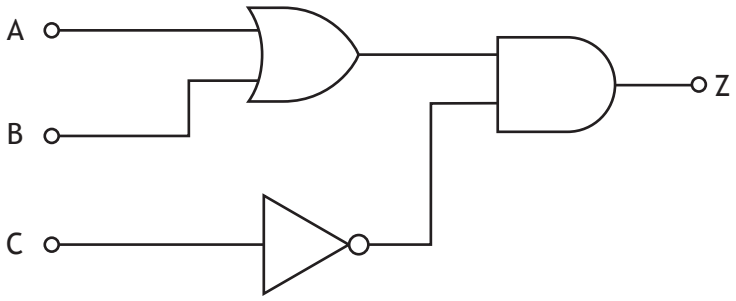

(c) Complete the Boolean equation for the logic diagram. **3**

Z = _____

* X 7 2 3 7 5 0 1 1 8 *

MARKS | DO NOT WRITE IN THIS MARGIN

13. (continued)

The logic diagram for a second part of the electronic control system is shown below.

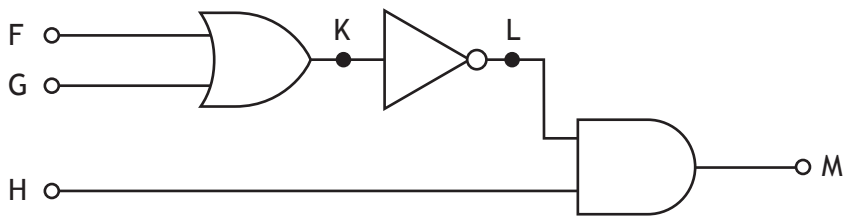

(d) Complete the truth table below for the logic diagram. **3**

F	G	H	K	L	M
0	0	0			
0	0	1			
0	1	0			
0	1	1			
1	0	0			
1	0	1			
1	1	0			
1	1	1			

[Turn over

MARKS | DO NOT WRITE IN THIS MARGIN

13. (continued)

The rollercoaster carriages sit on the track as shown below.

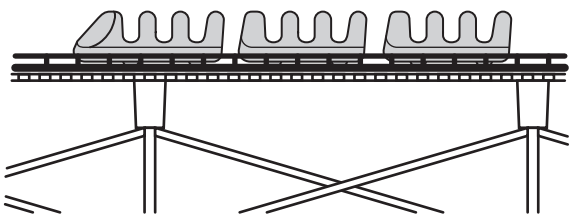

The forces acting on the system are shown in the diagram below.

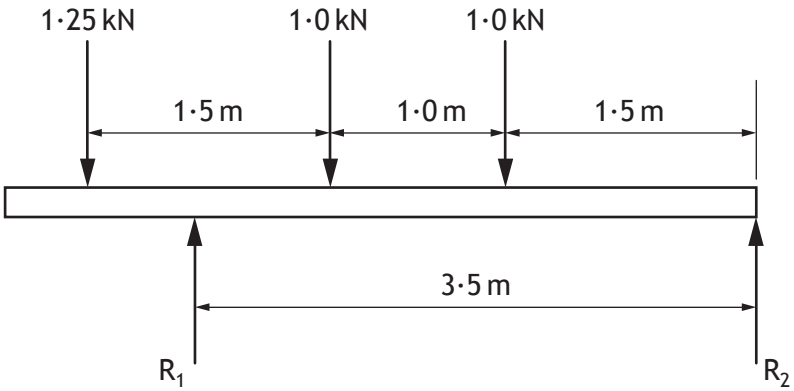

(e) Calculate the size of reaction force R_1, by taking moments about R_2. **3**
Show all working and final unit.

14. A pneumatic system used to lower metal components into an acid bath to be cleaned is shown below.

MARKS | DO NOT WRITE IN THIS MARGIN

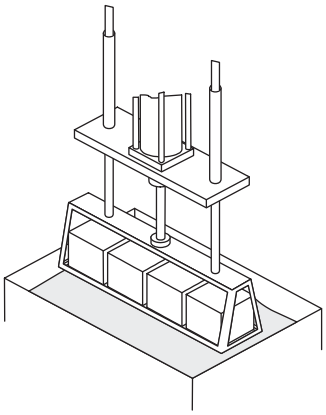

The pneumatic circuit used is shown below.

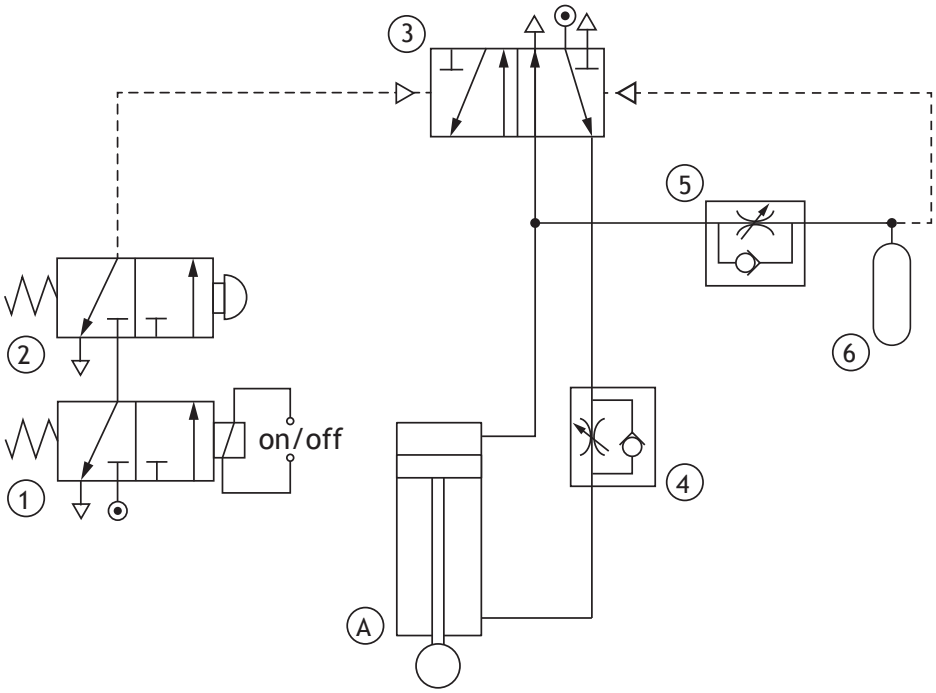

(a) Describe the operation of the pneumatic circuit. **4**

When Valve 1 is actuated . . .

MARKS | DO NOT WRITE IN THIS MARGIN

14. (continued)

The pneumatic cylinder used is shown in the diagram below.

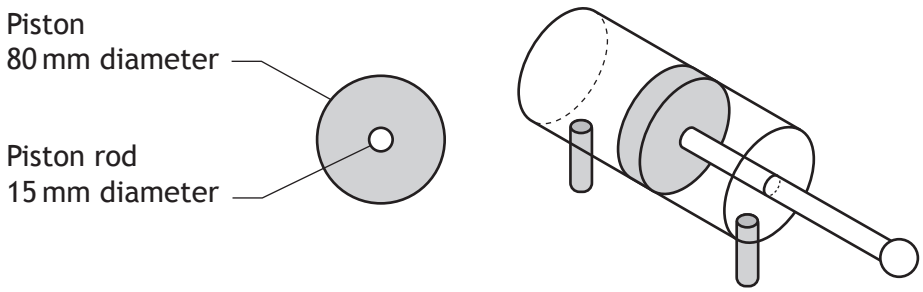

(b) Calculate the air pressure required to produce an **instroking** force of 1460 N. **4**

Show all working and final unit.

MARKS | DO NOT WRITE IN THIS MARGIN

14. (continued)

The solenoid on pneumatic valve ① is connected to a circuit as shown below.

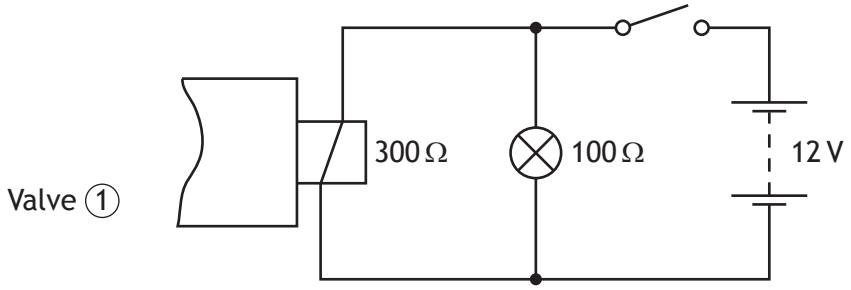

(c) Calculate the total resistance of the circuit. **2**

Show all working and final unit.

An ammeter is used to measure current in the circuit.

(d) (i) Draw the symbol for an ammeter below. **1**

(ii) Indicate, with an X, on the circuit above where an ammeter would be connected to measure the current through the solenoid. **1**

[Turn over

* X 7 2 3 7 5 0 1 2 3 *

15. A sign used to display a car's speed is shown below.

The sign is operated by a microcontroller. Input and output connections to the microcontroller are shown in the table below.

Input connections	Pin	Output connections
	7	
	6	speed display
	5	"smiley" face display
	4	
	3	
speed sensor (1 = too fast)	2	
	1	
	0	

The sign operates using the following sequence.

1 The speed sensor measures the speed of the car.
2 If the car is moving too fast, the speed display sign is switched on for 0·5 seconds.
3 If the car is not moving too fast, the "smiley" face display is switched on for 1 second.
4 The sequence then repeats.

X723750124

MARKS | DO NOT WRITE IN THIS MARGIN

15. (continued)

(a) Complete the flowchart for the sequence with reference to the Data Booklet and input/output connections. Include **all** pin numbers in your flowchart. **6**

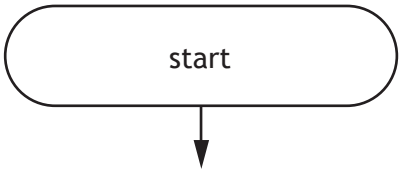

(b) State the type of program loop used in the operation of the sign. **1**

_____

[Turn over

MARKS | DO NOT WRITE IN THIS MARGIN

15. (continued)

The sign applies a load of 88 N onto a supporting pole, resulting in a stress of $0{\cdot}095\ \text{Nmm}^{-2}$.

(c) Calculate the cross-sectional area of the pole. **3**

Show all working and final unit.

A solar panel is used to provide power for the sign.

(d) Explain how the use of solar panels can contribute towards tackling climate change. **2**

[END OF QUESTION PAPER]

X723750126

MARKS | DO NOT WRITE IN THIS MARGIN

ADDITIONAL SPACE FOR ANSWERS

X723750127

MARKS | DO NOT WRITE IN THIS MARGIN

ADDITIONAL SPACE FOR ANSWERS

Question 2 – Tetiana Yurchenko/shutterstock.com
Question 4 – Coprid/shutterstock.com
Question 5 – Malll Themd/shutterstock.com
Question 8 – naten/shutterstock.com
Question 10 – Stephen Meese/shutterstock.com
Question 11 – Patrick Johnson/shutterstock.com
Question 13a – John Leung/shutterstock.com
Question 15 – sima/shutterstock.com

X723750128