FOR OFFICIAL USE

National
Qualifications
2023 MODIFIED

Mark

X835/76/01 Graphic Communication

THURSDAY, 11 MAY
1:15 PM – 3:15 PM

X835760 1

Fill in these boxes and read what is printed below.

Full name of centre

Town

Forename(s)

Surname

Number of seat

Date of birth
Day Month Year

Scottish candidate number

Total marks — 75

Attempt ALL questions.

All dimensions are in mm.

All technical sketches and drawings use third angle projection.

You may use rulers, compasses or trammels for measuring.

In all questions you may use sketches and annotations to support your answer if you wish.

Write your answers clearly in the spaces provided in this booklet. Additional space for answers is provided at the end of this booklet. If you use this space you must clearly identify the question number you are attempting.

Use **blue** or **black** ink.

Before leaving the examination room you must give this booklet to the Invigilator; if you do not, you may lose all the marks for this paper.

SQA ©

X835760101

MARKS | DO NOT WRITE IN THIS MARGIN

Total marks — 75

Attempt ALL questions

1. 3D CAD modelling software was used to create the sub-assembly of the door handle shown below.

(a) (i) Describe, using 3D CAD terms, how to constrain the three door handle components.

You may annotate the drawings and use sketches to support your answer. **4**

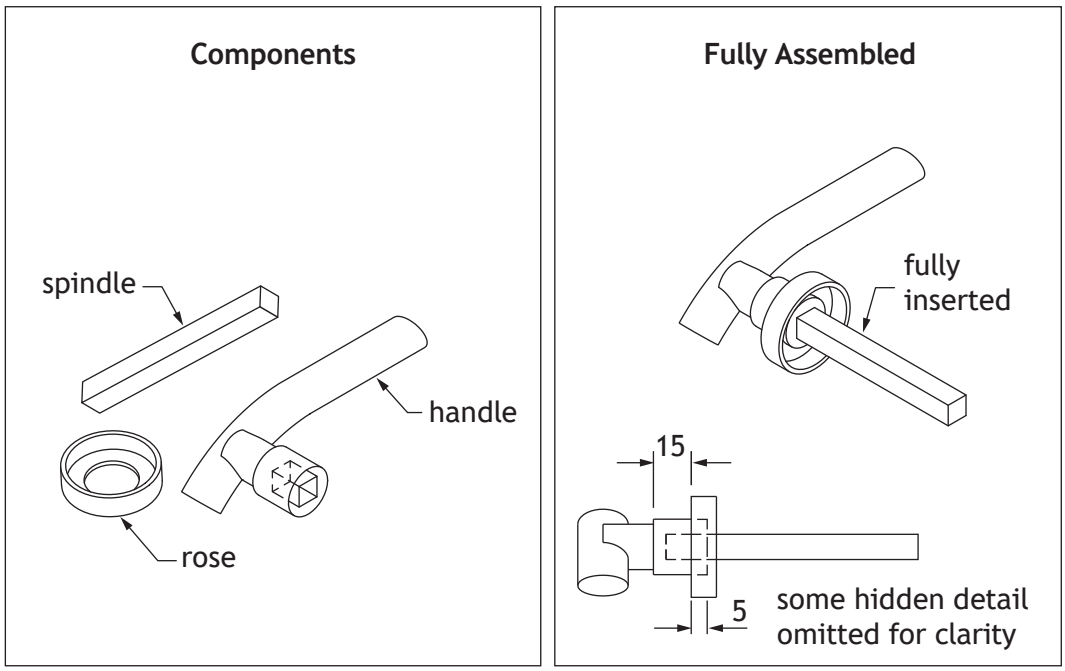

MARKS | DO NOT WRITE IN THIS MARGIN

1. (a) (continued)

(ii) Explain the term sub-assembly. **1**

The CAD technician used top-down modelling to model the sub-assembly components.

(iii) Describe **two** advantages to the CAD technician of using top-down modelling. **2**

(b) You must use the drawing provided on the **supplementary sheet for use with question 1 (b)** to answer this question.

(i) State the name of sectional view X, shown on the elevation. **1**

(ii) Explain the purpose of a detail view. **1**

(iii) Describe, giving **two** reasons, the purpose of an exploded isometric view. **2**

X835760103

1. (continued)

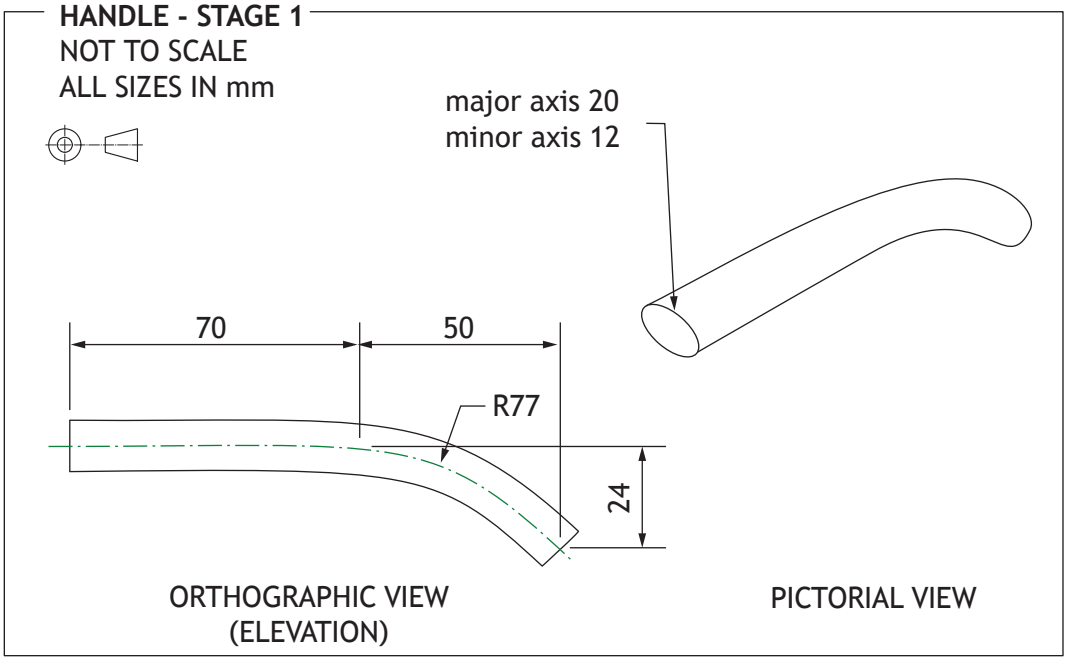

The CAD technician created the handle component in several stages. Dimensions for stage 1 of the 3D modelling process are provided on the working drawing above.

(c) Describe, using CAD modelling techniques, how to create stage 1.

You must refer to the dimensions given in the drawing.

You may use sketches to support your answer. **3**

X835760104

MARKS | DO NOT WRITE IN THIS MARGIN

2. Graphics for a toy are provided on the **supplementary sheets for use with question 2 (a)**.

(a) Describe the 3D CAD modelling techniques used to create the central support of the toy.

You must refer to the dimensions given on the **supplementary sheets for use with question 2 (a)**.

You may use sketches to support your answer. **8**

X835760105

2. (continued)

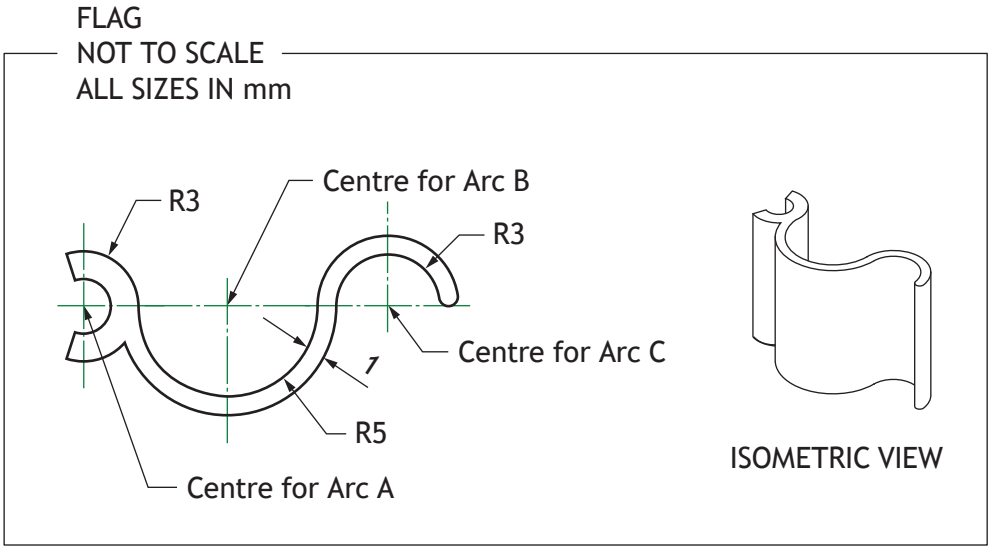

The toy flag component was modelled using tangency.

(b) (i) Explain the term tangency.

You may use sketches to illustrate your answer. **1**

(ii) Calculate the following distances. **2**

The distance from the centre of **arc A** to the centre of **arc B**.

The distance from the centre of **arc A** to the centre of **arc C**.

2. (continued)

MARKS | DO NOT WRITE IN THIS MARGIN

A drawing of the toy slide component is shown below.

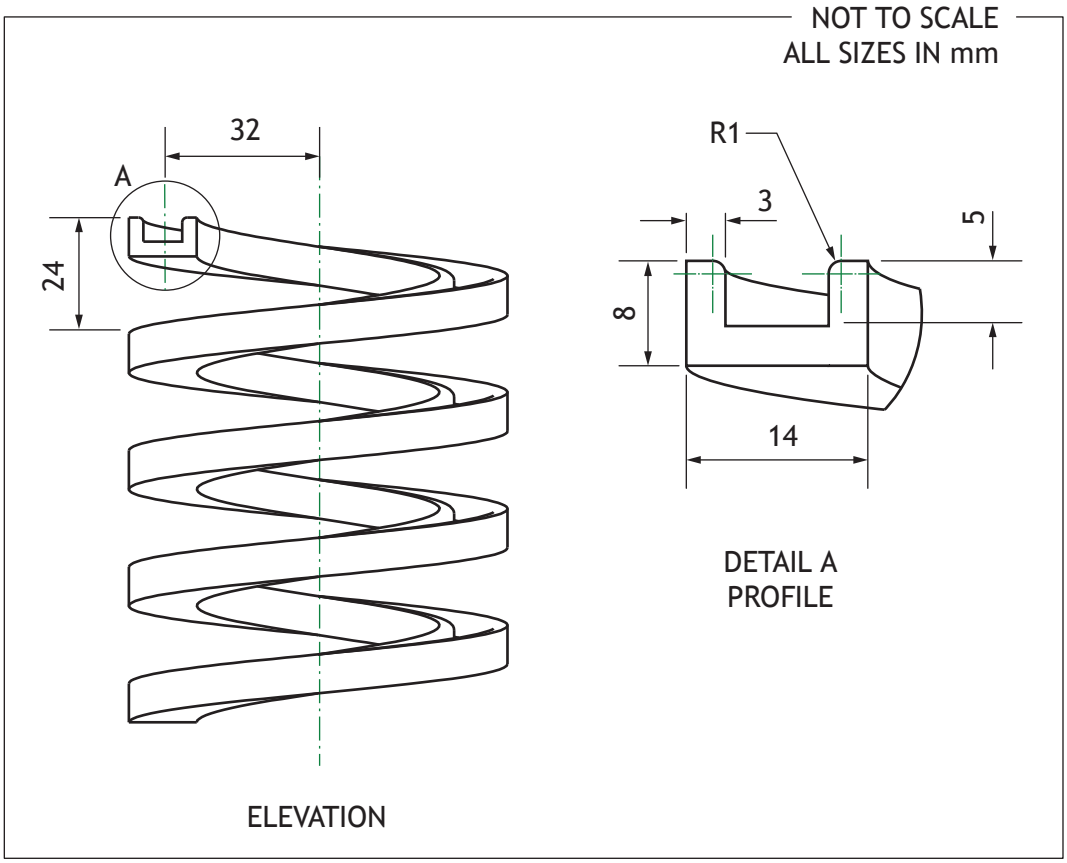

(c) Describe the single 3D CAD modelling technique used to create the slide component.

You must refer to the dimensions shown in the orthographic drawing shown above.

You may use sketches to support your answer. **4**

MARKS | DO NOT WRITE IN THIS MARGIN

3. A designer created a rendered 3D CAD illustration and electronic sketches of a concept delivery vehicle shown below.

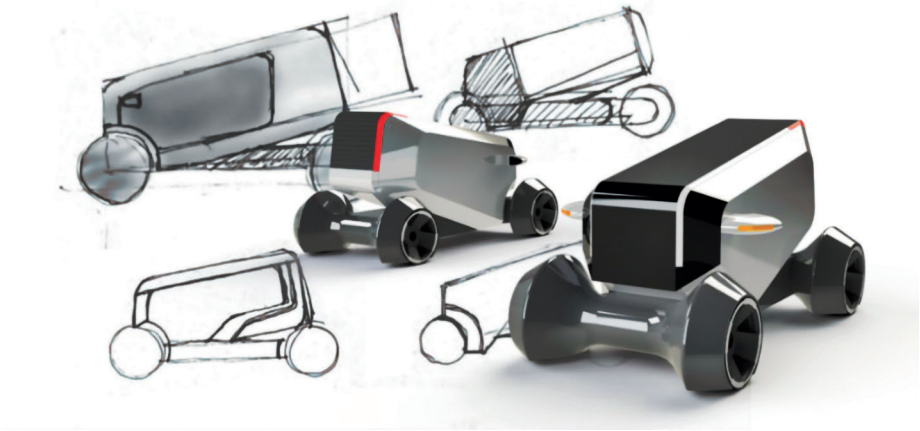

(a) Describe **two** advantages to the designer of using digital sketching instead of manual sketching. **2**

(b) Describe **three** benefits of using rendered 3D CAD illustrations to show design concepts to a client. **3**

X835760108

MARKS | DO NOT WRITE IN THIS MARGIN

3. (continued)

The designer also produced a 3D CAD illustration of the concept delivery vehicle using a sited environment.

(c) Describe, giving **two** reasons, the purpose of a sited environment. **2**

The illustrations are saved in a raster file format.

(d) Explain, giving **two** reasons, why a raster file format is used. **2**

The designer that carried out the work uses cloud computing-based CAD software.

(e) Explain, giving **two** reasons, the benefits of using cloud computing. **2**

[Turn over

X835760109

3. (continued)

Production drawings of a component from the concept delivery vehicle are shown below.

ISOMETRIC VIEWS OF WING MIRROR

Note:
Curve on edges changes from R60 to R30 along edge

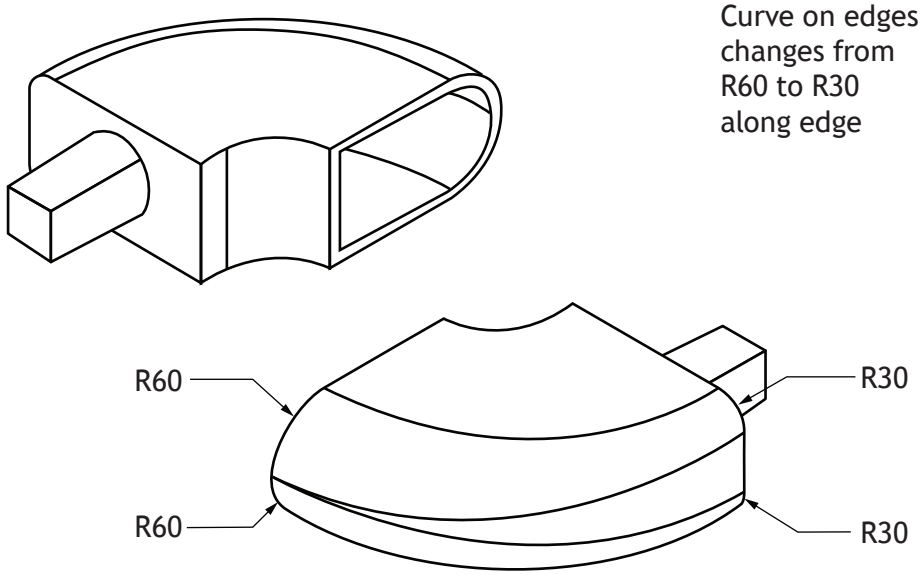

ORTHOGRAPHIC OF WING MIRROR
NOT TO SCALE
ALL SIZES IN mm
WALL THICKNESS 10

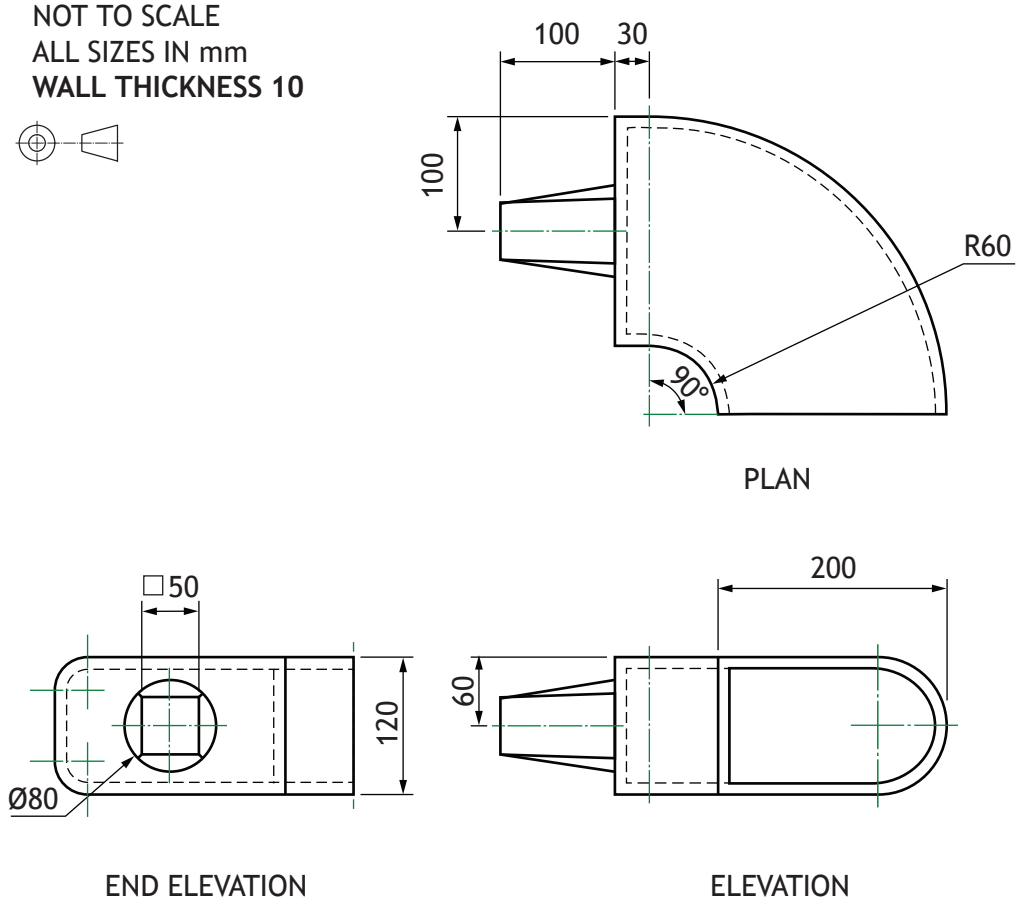

DO NOT WRITE IN THIS MARGIN

MARKS | DO NOT WRITE IN THIS MARGIN

3. (continued)

(f) Describe the 3D CAD modelling techniques used to create the wing mirror component.

You must refer to the dimensions shown in the drawings on the opposite page to answer this question.

You may use sketches to support your answer. **6**

X835760111

MARKS | DO NOT WRITE IN THIS MARGIN

3. (continued)

The 3D CAD model of the wing mirror will be used to create production graphics.

(g) Describe, giving **two** examples, the benefits of using 3D CAD models in manufacturing. **2**

_____

_____

_____

_____

_____

_____

X835760112

MARKS | DO NOT WRITE IN THIS MARGIN

4. A range of technical graphics have been produced to support the manufacture of a mounting bracket.

RENDERED ASSEMBLY AND EXPLODED VIEWS

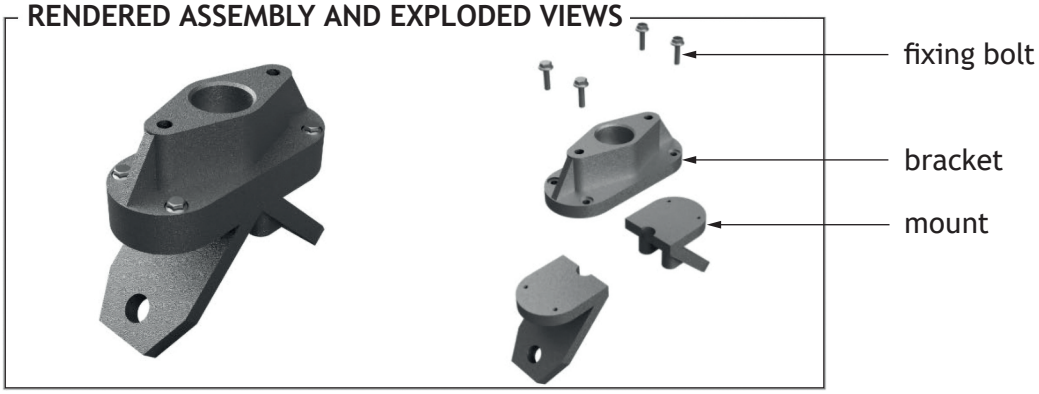

STEPPED SECTION OF BRACKET
NOT TO SCALE
ALL SIZES IN mm

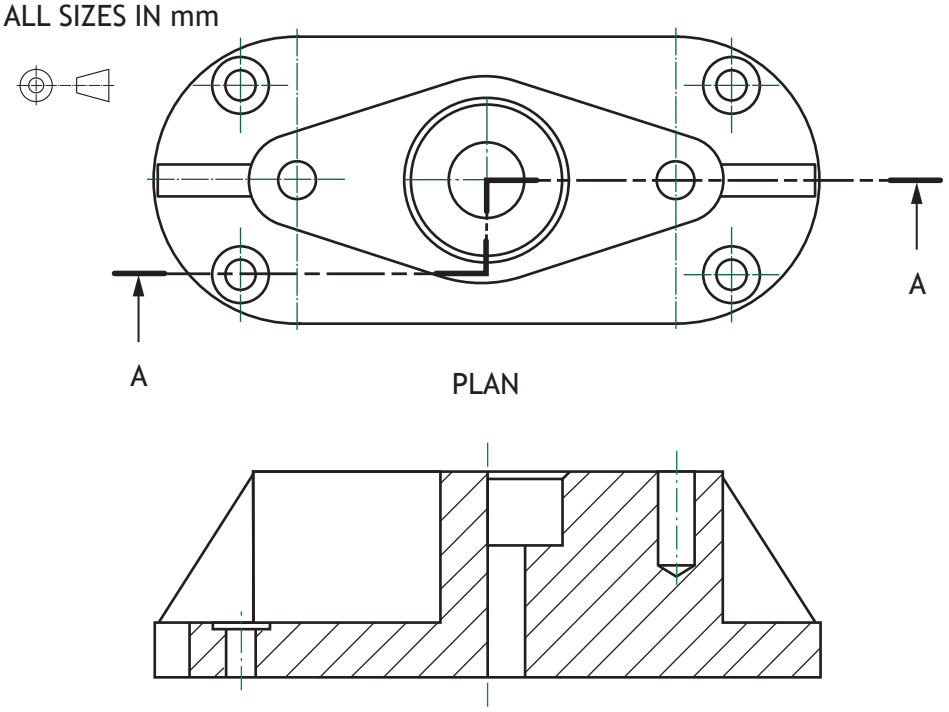

(a) Explain why a stepped section was used in the drawing above. **1**

_____

_____

_____

DO NOT WRITE IN THIS MARGIN

4. (continued)

The orthographic drawing of the mount is shown below.

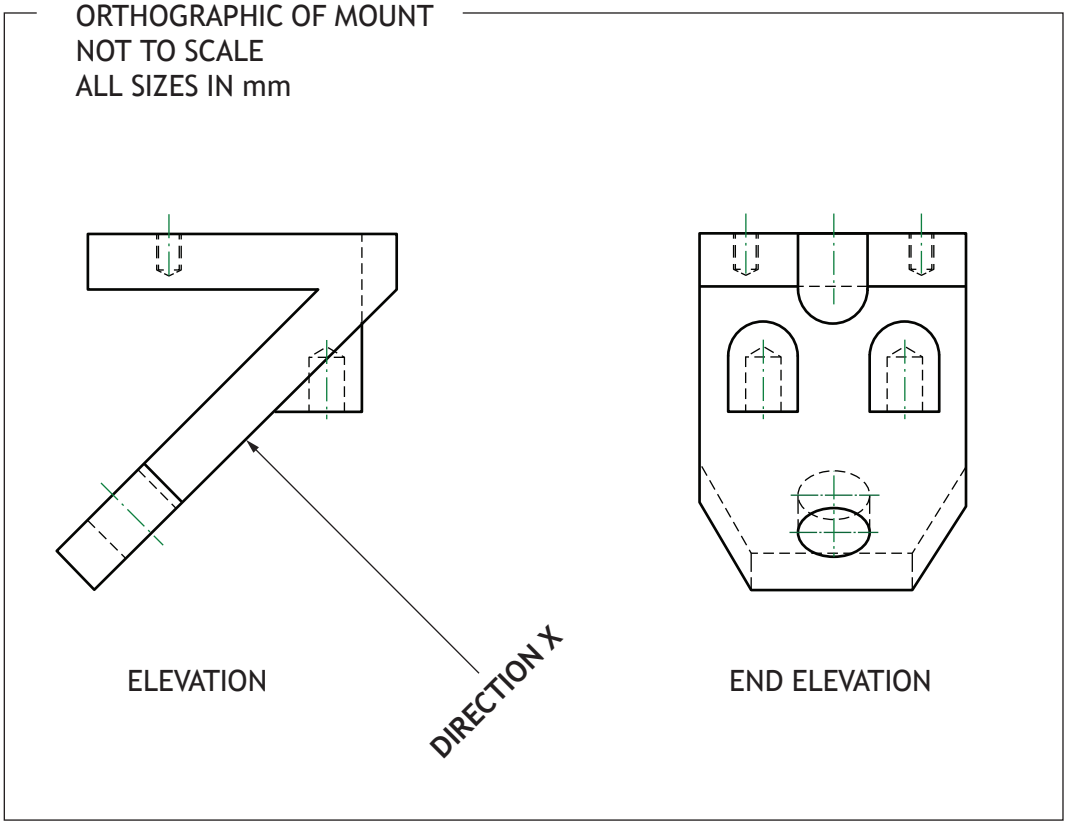

MARKS | DO NOT WRITE IN THIS MARGIN

4. (continued)

(b) Identify the correct auxiliary view of the mount in **direction X**, shown in the drawing opposite, by ticking (✓) a box below. **1**

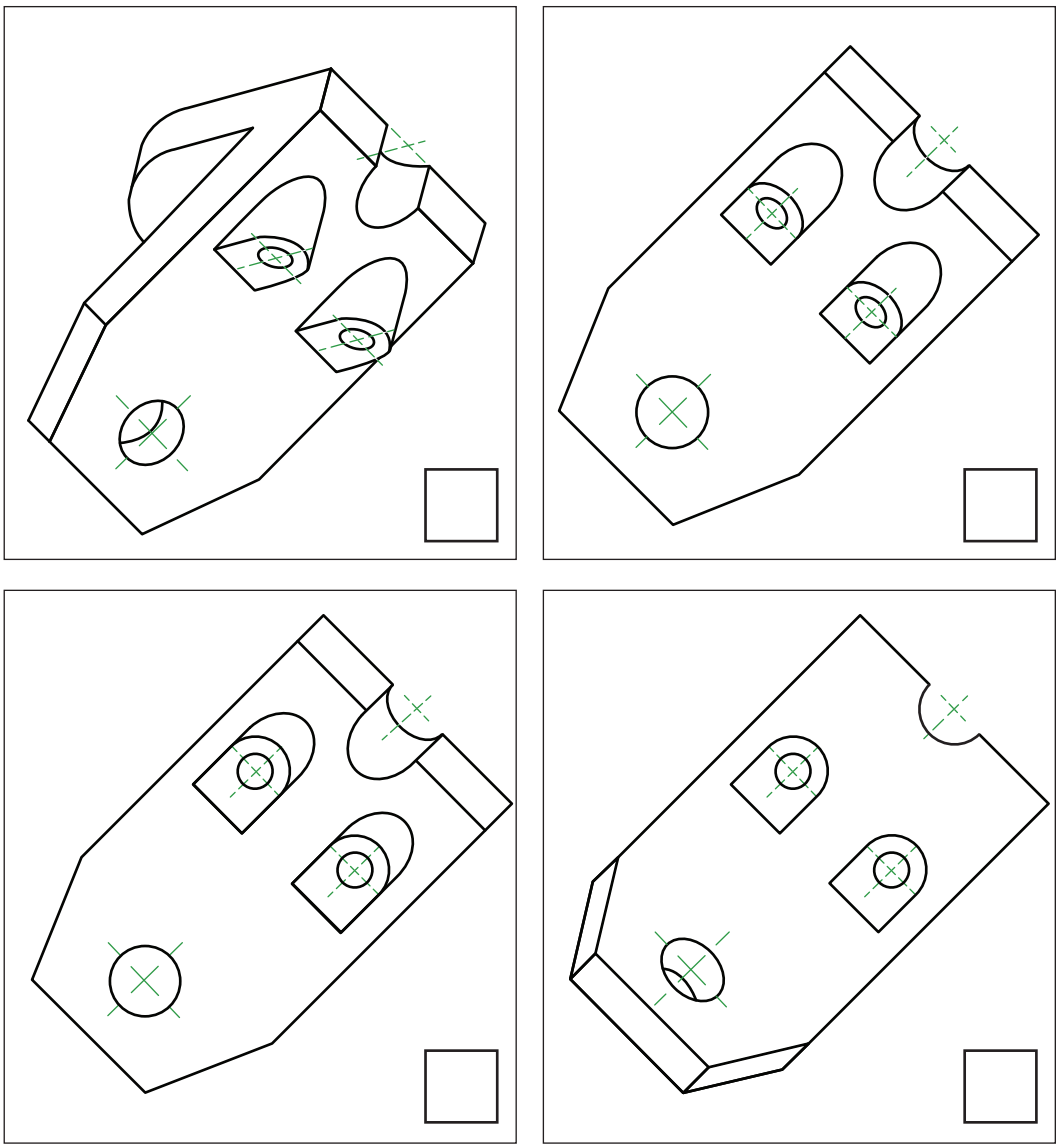

[Turn over

4. (continued)

For question 4 (c) you must refer to the **supplementary sheets for use with question 4 (c)**.

ORTHOGRAPHIC OF FIXING BOLT
SCALE 1:2
ALL SIZES IN mm

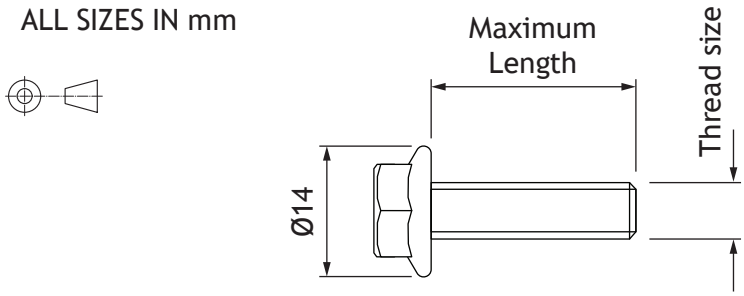

(c) (i) Calculate the maximum length of the threaded section of the fixing bolt. **1**

_____

(ii) State the thread size of the fixing bolt. **1**

_____

MARKS | DO NOT WRITE IN THIS MARGIN

5. A graphic design company have been asked to create a range of electronic and printed promotional graphics for a travel agent.

Layouts for a travel app are shown below.

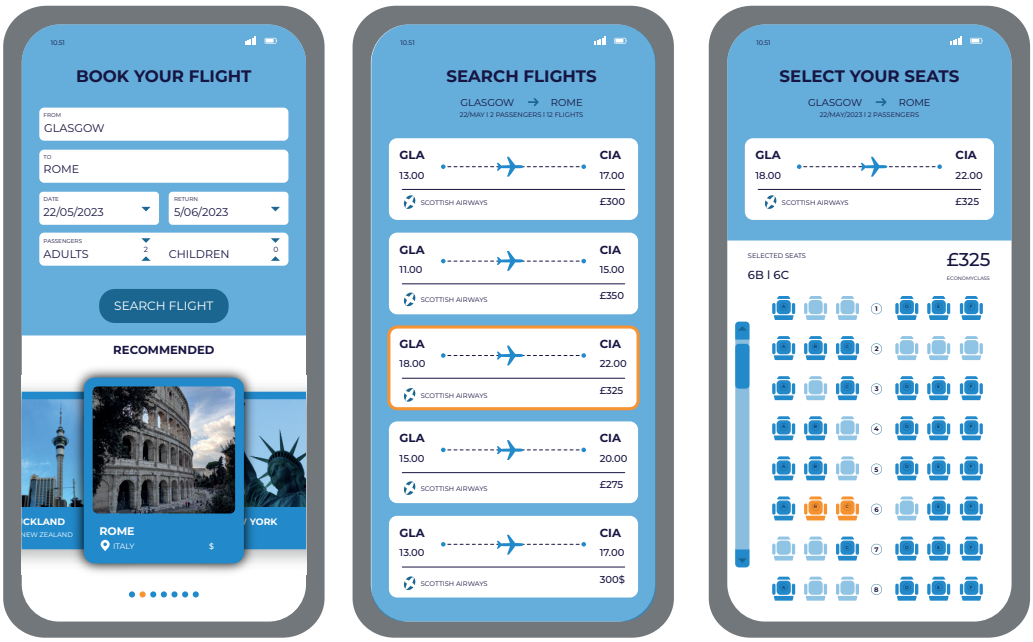

(a) (i) Explain, giving **two** reasons, why a limited colour palette and simple graphics have been used for the travel app layouts. **2**

(ii) Describe, giving **two** examples, how the graphic designer has created emphasis in the travel app layouts. **2**

5. (continued)

MARKS | DO NOT WRITE IN THIS MARGIN

In questions 5 (b) to (d) you must refer to the layouts on the **supplementary sheets for use with questions 5 (b) to (d).**

A series of double page spreads used to advertise holidays are shown on the **supplementary sheets for use with questions 5 (b) to (d).**

(b) (i) Describe, giving **two** examples, how the graphic designer has created depth to enhance the layouts. **2**

(ii) Explain, giving **two** examples, why the graphic designer's use of proportion has enhanced the layouts. **2**

X835760118

5. (b) continued **MARKS** DO NOT WRITE IN THIS MARGIN

(iii) Describe, giving **two** examples, how the graphic designer has created rhythm to enhance the layouts. **2**

(iv) Explain, giving **two** examples, why the graphic designer's use of shape has enhanced the layouts. **2**

(v) Describe, giving **two** examples, how the graphic designer has used mass to enhance the layouts. **2**

Drop caps have been used throughout the layouts.

(c) Explain, giving **two** reasons, why a drop cap can be used to enhance the readability of a document. **2**

[Turn over

5. (continued)

A pre-press version of the document was created for quality assurance prior to mass printing.

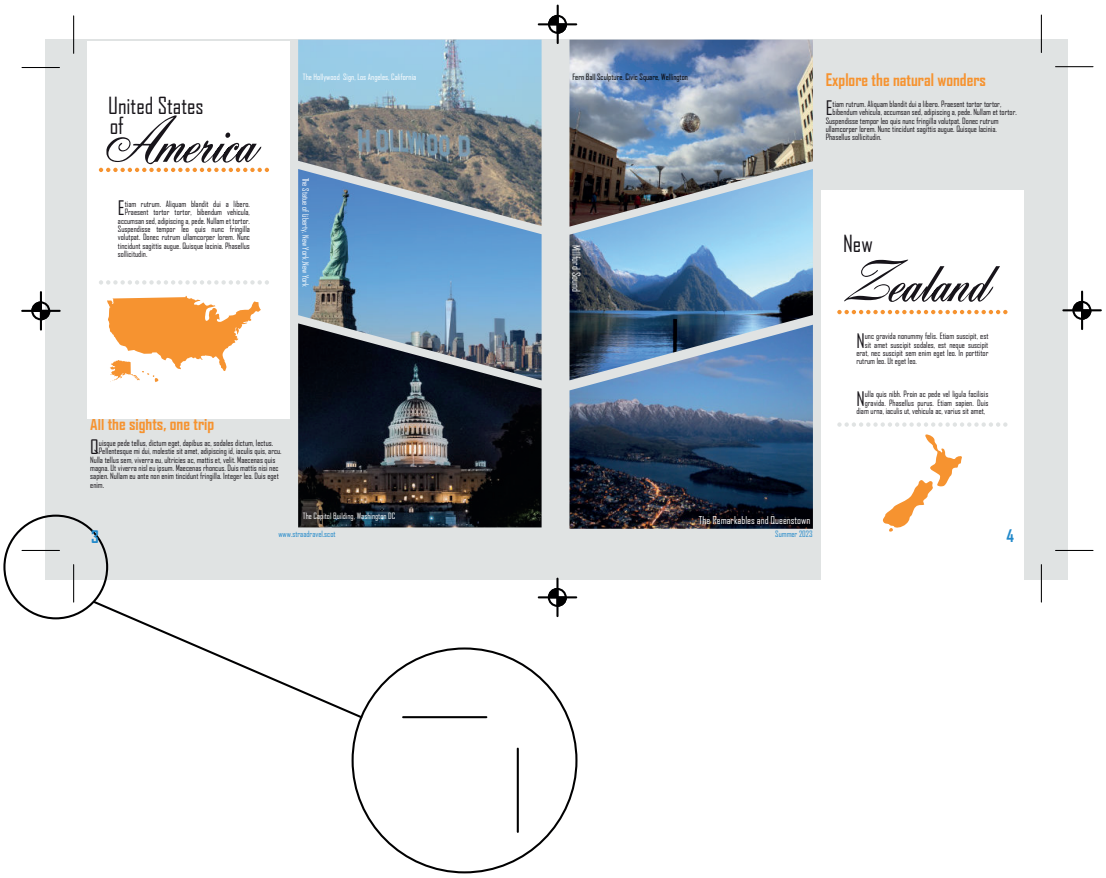

feature X

(d) Explain the purpose of feature X. **1**

_____

_____

MARKS | DO NOT WRITE IN THIS MARGIN

5. (continued)

The graphic design company employed local photographers for the desktop published items.

(e) Describe **two** advantages of the company using photographs they own the rights to. **2**

Vector graphics were used in the layouts.

(f) Describe **two** advantages of using vector graphics. **2**

The graphic design company are keen to improve their environmental impact.

(g) Explain **two edits** that could be made **to the layouts** that would improve their environmental impact. **2**

[END OF QUESTION PAPER]

X835760121

MARKS | DO NOT WRITE IN THIS MARGIN

ADDITIONAL SPACE FOR ANSWERS

X835760122

MARKS | DO NOT WRITE IN THIS MARGIN

ADDITIONAL SPACE FOR ANSWERS

X835760123

[BLANK PAGE]

DO NOT WRITE ON THIS PAGE

Acknowledgement of copyright

Question 5 Image by Monstera is taken from pexels.com, https://www.pexels.com/photo/a-world-map-on-the-wall-7412035/

Image by Jason Gomes is taken from pexels.com, US Capitol Building in Washington during Night Time · Free Stock Photo (pexels.com)

Image by Liger Pham is taken from pexels.com, Mt. Fuji, Japan · Free Stock Photo (pexels.com)

X835760124