National
Qualifications
2019

2019 Engineering Science

Higher

Finalised Marking Instructions

© Scottish Qualifications Authority 2019

These marking instructions have been prepared by examination teams for use by SQA appointed markers when marking external course assessments.

The information in this document may be reproduced in support of SQA qualifications only on a non-commercial basis. If it is reproduced, SQA must be clearly acknowledged as the source. If it is to be reproduced for any other purpose, written permission must be obtained from permissions@sqa.org.uk.

General marking principles for Higher Engineering Science

Always apply these general principles. Use them in conjunction with the detailed marking instructions, which identify the key features required in candidates' responses.

(a) Always use positive marking. This means candidates accumulate marks for the demonstration of relevant skills, knowledge and understanding; marks are not deducted for errors or omissions.

(b) If a specific candidate response does not seem to be covered by either the principles or detailed marking instructions, and you are uncertain how to assess it, you must seek guidance from your team leader.

(c) Where a candidate makes an error at an early stage in a multi-stage calculation, award marks for correct follow-on working in subsequent stages. Do not award marks if the error significantly reduces the complexity of the remaining stages. Apply the same principle in questions which require several stages of non-mathematical reasoning.

(d) SQA presents all units of measurement in a consistent way, using negative indices where required (for example ms−1). Candidates can respond using this format, or solidus format (m/s), or words (metres per second), or any combination of these (for example metres/second).

(e) For numerical questions, candidates should round their answers to an appropriate number of significant figures. However, award marks if their answer has up to two figures more or one figure less than the expected answer.

(f) Unless a numerical question specifically requires candidates to show evidence of their working, award full marks for a correct final answer (including unit) on its own.

(g) Award marks where a labelled diagram or sketch conveys clearly and correctly the response required by the question.

(h) Award marks regardless of spelling if the meaning is unambiguous.

(i) Candidates can answer programming questions in any appropriate programming language. Award marks where the intention of the coding is clear, even where there are minor syntax errors.

(j) For 'Explain' questions, only award marks where the candidate goes beyond a description, for example by giving a reason, or relating cause to effect, or providing a relationship between two aspects.

(k) Where separate space is provided for rough working and a final answer, only award marks for the final answer. Ignore all rough working.

Marking instructions for each question

Section 1

Question			Expected response	Max mark	Additional guidance
1.	(a)		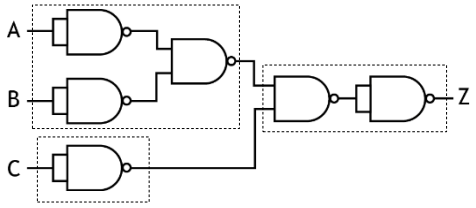	**3**	1 mark for OR plus connections. 1 mark for NOT plus connections. 1 mark for AND plus connections.
	(b)		Fewer ICs **means** simpler construction. Fewer ICs **means** smaller product size. Fewer ICs **means** reduced cost. Buying NAND gates in bulk would be lower in cost than buying different types of gates to perform the same function.	**1**	1 mark for any suitable response Must have a cause and an effect.
2.	(a)		$V_{OUT} = (1 + R_f/R_i) \times V_{IN}$ $V_{OUT} = (1 + (330/15)) \times 0{\cdot}002$ V_{OUT} = **0·046 V (46 mV)(2sf)**	**1**	1 mark for final answer with unit.
	(b)		By increasing the value of R_f (Feedback Resistance). By decreasing the value of R_i (Input Resistance). Increasing the ratio of R_f to R_i.	**1**	1 mark for correct description of R_f or R_i.
	(c)		Summing amplifier.	**1**	Accept summing.
3.			Length AB = 1·3 tan 38 Length AB = 1·015671314 m $\Sigma M = 0$ ⇨ $1{\cdot}3 \times 2{\cdot}25 = 1{\cdot}016 \times R_B$ $R_B = (1{\cdot}3 \times 2{\cdot}25)/1{\cdot}016$ $= 2{\cdot}879868672$ **= 2·9 kN (2sf)** Direction = left to right horizontally. ⟶	**4**	1 mark for length AB (no units required). 1 mark for substitution. 1 mark for magnitude with units. 1 mark for direction (accept arrow at roller B).

Question			Expected response	Max mark	Additional guidance
4.			Correction 2 *(PBASIC) check: if pressure ≤* **100** *then check* *(ARDUINO) if (Pressure >* **100***){* Correction 3 (PBASIC) *for b3 =* **1** *to 5* (ARDUINO) *{for(int counter=***1***; counter<=5;*	**2**	1 mark for identification of less than or equal to 100. 1 mark for identification of correct number of loops. Number should show a range with a difference of 5, eg 0-4, 8-12 etc. Exact syntax not required. Must be two faults performing different functions but can answer one from arduino and one from PBasic.
5.			$\Sigma F_V = 0$ $R_V = 840 \sin 64 - 690 \sin 43$ $= 284{\cdot}4081304$ N $\Sigma F_H = 0$ $R_H = 840 \cos 64 + 690 \cos 43$ $= 872{\cdot}8658174$ N $R = \sqrt{(284{\cdot}4081304^2 + 872{\cdot}8657174^2)}$ R = 918.0319819 R = 920 N $\Theta = \tan^{-1} (284{\cdot}4081304 / 872{\cdot}8657174)$ $\Theta = 18{\cdot}04729954$ **$\Theta = 18^0$ (2sf)**	**4**	1 mark for R_V (no units required). 1 mark for R_H (no units required). 1 mark for R with units. 1 mark for Θ with units.
6.			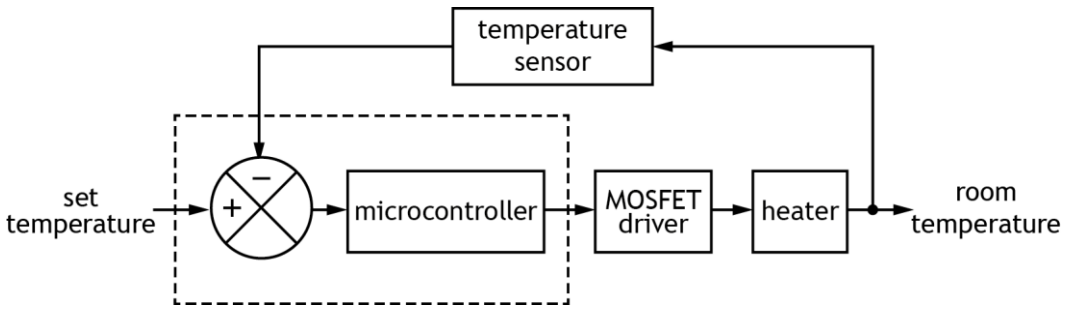	**3**	1 mark for error detector in negative configuration (correct + and – position). 1 mark for temperature sensor/ thermostat/thermocouple/Heat sensor (do not accept thermometer or thermistor) 1 mark for MOSFET driver (transducer driver(TD), BJT, output driver, driver)

Section 2

Question			Expected response	Max mark	Additional guidance
7.	(a)		P = 2π × n × T n = 18000 / (2 × 3·14 × 23) n = 124·6192191 n = **120 rev sec^{-1} (2 sf)**	**1**	1 mark for answer with units.
	(b)		Power required from battery = (22 × 18000) / 0·73 = 542465·7534 W t = E/P t = 320000000 / 542465·7534 t = 589·8989899 t = **590 s (2sf)**	**2**	1 mark for power. 1 mark for time with unit.
			Energy out = Energy In x eff = 320000000 x 0.73 = 233600000 J Time = Energy / Power = 233600000 / (22 x 18000) = 589.8989899 = **590 s (2sf)**		1 mark for energy. 1 mark for time with unit.
	(c)		Economic: Reduces running cost due to less electricity being used. Social: Longer flight times would be possible allowing people to travel further without stop-over. Since the aeroplane is more efficient people will use the airline as they are helping the environment.	**2**	1 mark for one economic relating to efficiency. 1 mark for one social relating to efficiency. Must have a cause and an effect for 1 mark. Credit should be given for any other suitable response which is an explanation.
	(d)		E_k = 0·5 × 4800 × (95^2-25^2) = 20160000 J E_k = (0·5 × 4800 × (95^2))-(0·5 × 4800 × (25^2)) = 20160000 J E_e = 20160000 × 0·64 = 12902400 = 13000000 J = **13 MJ (2 sf)**	**3**	1 mark for the difference between 95 and 25 (either as shown or through finding the difference between two separate E_k calculations) 1 mark for calculation of E_k (no units required). If candidate does E_k= 0·5 x 4800 x 70^2 E_k = 11760000 (1 mark for E_k) E_e = 7526400 = 7.5 MJ (1 mark for E_e) 1 mark for E_e, **units required.**

Question			Expected response	Max mark	Additional guidance
7.	(e)		Reduces wear and tear (seizing) which means fewer repairs. Reduces energy losses so makes the system more efficient.	**2**	1 mark for first cause and effect. Credit to be given for any other suitably detailed explanation referring to failure. 1 mark for second cause and effect.
	(f)		$V_{in} = V_{out} / (-R_f/R_i)$ $= - 4{\cdot}8 / (12/24)$ $= -9{\cdot}6$ V $-9{\cdot}6 = - R_f (5/12 + 5/48)$ $R_f = 9{\cdot}6/(5/12 + 5/48)$ $= 18{\cdot}432$ = **18 kΩ (2sf)**	**3**	1 mark for input to inverting amp, no unit required. 1 mark for substitution.. 1 mark for final answer with unit
8.	(a)		$V_{refA} = 5 \times 30/45$ $= 3{\cdot}333333...$ = **3·3 V (2sf)**	**2**	1 mark for substitution. 1 mark for final answer with unit.
	(b)	(i)	Saturation Voltage = 9 x 0·85 = 7·65 V Voltage across resistor = 7·65 - 0·7 = 6·95 V $I_b = 6{\cdot}95 / 2700$ $= 0{\cdot}002574074074$ = **0·0026 A (2.6 mA, 2sf)**	**3**	1 mark for saturation voltage. 1 mark for voltage across resistor. 1 mark for final answer with unit.
		(ii)	$I_c = 0{\cdot}0026 \times 140$ $= 0{\cdot}364$ = **0·36 A (360 mA, 2sf)**	**1**	Allow FTE from (b)(i) 1 mark final answer with unit.

Question			Expected response	Max mark	Additional guidance
8.	(c)		**Bank B lighting / V_{speed} = 0 – 1.67 V** • Initially, V_{speed} will be below the V_{refB} so op-amp B will be saturated positive. • This will cause transistor B to switch on, causing bank B to light. • This will cause op-amp A to saturate negatively causing bank A to be off. **Neither bank lighting / V_{speed} = 1.68 – 3.36 V** • When V_{speed} is between the two reference voltages neither bank will be on. • When V_{speed} is greater than V_{refB} op-amp B will saturating negative. • This switches off transistor B and bank B. • When V_{speed} is less than V_{refA} op-amp A will saturate negative. • This switches off transistor A and bank A. **Bank A lighting / V_{speed} = 3.37 – 5.0 V** • When V_{speed} is greater than V_{refA} it will saturate op-amp A positive. • This causes transistor A to switch on, this causes bank A to turn on. • This will cause op-amp B to remain saturated negatively causing bank B remain off.	**6**	1 mark for each relevant description, up to a total of 6. Max 2 marks awarded for each lighting condition.
	(d)		The values of the resistances in the voltage divider must change or the values of V_{refB} and V_{refA} must change. Using variable resistors would allow users to change the values.	**2**	1 mark for indicating the need for resistances to change. 1 mark for indicating a viable method for the changes to be made by the user. Credit to be given if a more radical change such as using a microcontroller based circuit is suggested. Answer must still include a method of allowing users to make changes to settings to achieve both marks.

Question			Expected response	Max mark	Additional guidance
9.	(a)	(i)	• Material B is not as strong as material A. • Material B is stronger than material C. • Material B is less ductile than material A and C. • Material B is less malleable than material A and C. • Material B is more brittle than material A and C. • Material B is more elastic than material A and C. • Material B is less plastic than material A and C.	**3**	1 mark for each description that compares one material against another. Only 1 mark available per property. Accept: Material B is less stiff than material A and more stiff than material C.
		(ii)	Material A – mild steel or nickel alloy. Material C – plastic, ABS polycarbonate.	**2**	1 mark material A. 1 mark material B (accept wood, parallel to grain).

Question			Expected response	Max mark	Additional guidance
9.	(b)			7	1 mark for Magnitude of AB with unit. 1 mark for Magnitude of AC with unit. 1 mark for Magnitude of BC with unit. 1 mark for Magnitude of BD with unit. 1 mark for Nature of BC. 1 mark for Nature of BD. 1 mark for horizontal of BC.

Member	Magnitude	Nature
AB	**27 kN**	STRUT
AC	**11 kN**	TIE
BC	**28 kN**	**TIE**
BD	**25 kN**	**STRUT**

Node A

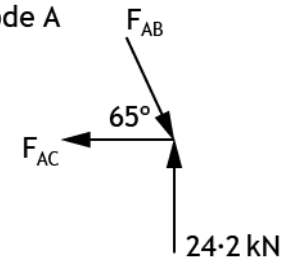

$\Sigma F_V = 0$, $F_{ABV} = 24{\cdot}2$ kN ↓

$F_{AB} = 24{\cdot}2/\sin 65$
$= 26{\cdot}70174564$
$=$ **27 kN (2sf)**

1 mark $\mathbf{F_{AB}}$ with unit.

$F_{ABH} = 27 \times \cos 65$
$= 11{\cdot}41069307$ →

$\Sigma F_H = 0$,
$F_{AC} =$ **11 kN (2sf)**

1 mark $\mathbf{F_{AC}}$ with unit.

Node B

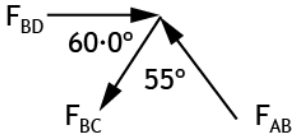

$\Sigma F_V = 0$, $F_{BCV} = 24{\cdot}2$ kN ↓

$F_{BC} = 24{\cdot}2/\sin 60$
$= 27{\cdot}94375303$
$=$ **28 kN TIE (2sf)**

F_{BC}
1 mark for magnitude with unit.
1 mark for nature.

$F_{BCH} = 28 \times \cos 60$
$= 13{\cdot}97187652$ ←

1 mark $\mathbf{F_{BCH}}$.

$\Sigma F_H = 0$,
$F_{BD} = F_{BCH} + F_{ABH}$
$= 13{\cdot}97187652 + 11{\cdot}41069307$
$= 25{\cdot}38256959$
$=$ **25 kN STRUT (2sf)**

F_{BD}
1 mark for magnitude with unit.
1 mark for nature.

Question			Expected response	Max mark	Additional guidance
10.	(a)	(i)	UTS = 300 Nmm^{-2} from data booklet $A = (\pi d^2)/4 = 50{\cdot}24\ mm^2$ $\sigma = F/A = 33{\cdot}2\times10^3 / 50{\cdot}24$ $= 660{\cdot}8280255\ Nmm^{-2}$ FOS = UTS / σ = 300 / 660.8280255 = 0·4539795036 = **0·45 (2sf)**	**4**	1 mark, no unit required. 1 mark, no unit required. 1 mark, no unit required. 1 mark, no unit required (if a unit given, final mark not awarded).
		(ii)	There is no factor of safety so the design is incorrect, the design will fail in operation.	**1**	Any appropriate comment based on the FOS found in (a)(i).
		(iii)	$\sigma = F/A = 33{\cdot}2 / 491$ $= 0{\cdot}06761710794\ kNmm^{-2}$ E = 110 $kNmm^{-2}$ from data booklet $\varepsilon = \sigma / E = 0{\cdot}06761710794 / 110$ $= 6{\cdot}147009813 \times10^{-4}$ $\Delta L = \varepsilon L$ $= 6{\cdot}147009813 \times10^{-4} \times 0{\cdot}78$ $= 4{\cdot}794667654 \times10^{-4}$ = **$4{\cdot}8\times10^{-4}$ m (2sf)**	**4**	1 mark, no unit required. 1 mark, no unit required. 1 mark, no unit required. 1 mark, unit required.
10.	(b)	(i)	UDL = 48·4× 0·9 = 43·56 kN CWM = ACWM 0·2 × Fsin74 = 43·56 × 0·75 F = 169·9329128 F = **170 kN (2sf)**	**3**	1 mark for UDL point load equivalent, no unit required. 1 mark for correct substitution. 1 mark for F, unit required. FTE mark available only if moments applied.

Question			Expected response	Max mark	Additional guidance
10.	(b)	(ii)	$F_V = 170 \times \sin 74 - 43{\cdot}56$ $= 119{\cdot}8544883$ kN $F_H = 170 \times \cos 74$ $= 46{\cdot}85835049$ kN $R_{hinge} = \sqrt{(119{\cdot}8544883^2 + 46{\cdot}85835049^2)}$ $= 128{\cdot}688785$ = **130 kN (2 sf)** $\tan \theta = 119{\cdot}8544883 / 46{\cdot}85835049$ $\theta = 68{\cdot}64647308$ **$\theta = 69^o$ (accept 21°) (2 sf)** 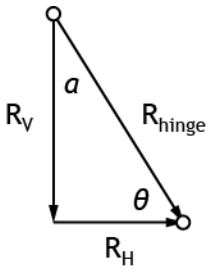	**4**	1 mark for F_V, no unit required. 1 mark for F_H, no unit required. 1 mark for F_{hinge}, unit required. 1 mark for either θ or α, unit required.

Question			Expected response	Max mark	Additional guidance
11.	(a)		$M = \overline{A}\cdot(B\cdot\overline{C} + D)$	**4**	1 mark for NOT A with AND. 1 mark for B and NOT C. 1 mark for OR D. 1 mark for bracket. Credit given to any other correct Boolean equation
			Alternative answer $M = \overline{A} \cdot B \cdot \overline{C} + \overline{A} \cdot D$		1 mark for 1st NOT A with AND. 1 mark for B and NOT C. 1 mark for 2nd NOT A with AND. 1 mark for OR.
	(b)		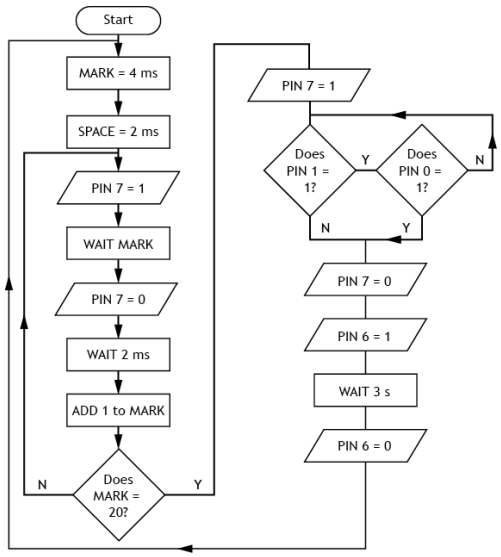 Pin 7 = Motor Pin 6 = Brake Pin 1 = Override Switch Pin 0 = Emergency Stop	**13**	Assume time unit is millisecond if not stated.. 1 mark for “Pin 7 = 1” and “Pin 7 = 0” 1 mark for “WAIT MARK”. 1 mark for “WAIT 2 ms”/”WAIT SPACE”. 1 mark for “ADD 1 to MARK”. 1 mark for decision box and “MARK = 20?”. 1 mark for “Pin 7 = 1”. 1 mark for decision box and “Pin 1 = 1?”. 1 mark for decision box and “Pin 0 = 1?”. **NB Candidates may write the decision boxes in the opposite orientation than given in the solution opposite.** 1 mark for correct Y/N directions from both decision boxes. 1 mark for “Pin 7 = 0”. 1 mark for “Pin 6 = 1” and “Pin 6 = 0”. 1 mark for “WAIT 3 s” / “WAIT 3000”. 1 mark for LOOP to above start conditions.

Question			Expected response	Max mark	Additional guidance
12.	(a)		***Valve 9*** • V1 sends pilot air to V9 causing the main air through V9 to be cut off. ***Cylinder A instroke*** • …this sends pilot air to V2 which instrokes cylinder A. ***Cylinder B outstroke*** • …this actuates V3 which sends a pilot air signal through V6 to actuate V4 and outstroke cylinder B. ***Valve 5*** • V5 is actuated which sends a pilot signal to V6 to cut off the signal to V4. • V5 also sends a pilot signal to a delay circuit which will eventually actuate V4 and v9. ***Cylinder B instroke*** • When V4 is actuated, cylinder B instrokes and actuates V7. ***Cylinder A outstroke*** • V7 will send a pilot signal through V8 to V2 causing cylinder A to outstroke. • When cylinder A outstrokes it actuates V8 and cuts off the signal to V2 allowing the process to begin again. ***Valves 6 & 9*** • Valves 6 and 9 cut off the air supply to prevent cylinders instroking before the required conditions are met.	**7**	1 mark for each description up to a maximum of 7 marks. For 7 marks a description of the last bullet point must be made.

Question			Expected response	Max mark	Additional guidance
12.	(b)		Thermistor 2 – 800 Ω V_{Fixed} = 5-3·2 = 1·8 V V_{Fixed} / V_{Therm} = R_{Fixed} / R_{Therm} R_{Fixed} = (1·8/3·2) × 800 **R_{Fixed} = 450 Ω (2sf)**	**3**	1 mark for thermistor resistance, no unit required. 1 mark for correct substitution. 1 mark for R_{Fixed}, unit required
			Alternative method V_{GATE} = (V_{SUPPLY} x R_{THERM}) / (R_{THERM} x R_{FIXED}) 3.2 = (5 x 800) / (800 x R_{FIXED}) R_{FIXED} = (4000 – 2560) / 3.2 **R_{FIXED} = 450 Ω (2sf)**		1 mark for thermistor resistance, no unit required . 1 mark for correct substitution. 1 mark for R_{Fixed}, unit required.
	(c)		Skill: Calculating the speeds of drive systems. Using simulation software to model/ design/test mechanical aspects of the system. Knowledge: How to reduce friction in drive systems How to increase efficiency in drive systems. Knowledge of materials (self-lubricating).	**2**	Simply stating knowledge of drive systems no marks. 1 mark for skill. 1 mark for knowledge.

Question			Expected response	Max mark	Additional guidance
12.	(d)		Distance of 1 rev of pinion 24 × 3·0 = 72 mm No revolutions required = 2750 / 72 = 38·19444444 revolutions Speed of motor = (38·19444444/3) = 12·73148148 = **13 rev sec^{-1} (2sf)**	**3**	1 mark for distance, no unit required. 1 mark for revolutions, no unit required. 1 mark for speed, unit required. Accept 760 revs min^{-1}.
			Alternative method Total number of teeth required to move 2.75 m 2750 / 3 = 916.6666667 Total number of revolutions 916.6666667 / 24 = 38.19444444 Speed of motor = (38·19444444/3) = 12·73148148 = **13 rev sec^{-1} (2sf)**		1 mark for distance, no unit required. 1 mark for revolutions, no unit required. 1 mark for speed, unit required.
12.	(e)		I = P /V = 8·5 / 12 = 0·7083333333 A I = V / R I = 12 / ((12 / 0·7083333333) + 0·65)) I = 12 / 17·59117647 I = 0·6821601739 **I = 0·68 A (2sf)**	**3**	1 mark for motor current, no unit required. 1 mark for correct substitution. 1 mark for final answer, unit required.
			Alternative Method R = V^2 / R R = 12^2 / 8·5 R = 16·94117647 Ω I = V / R I = 12 / (16·94117647 + 0.65) I = 0·6821601739 **I = 0·68 A (2sf)**		1 mark for motor resistance, no unit required. 1 mark for correct substitution. 1 mark for final answer, unit required.

[END OF MARKING INSRUCTIONS]